MODELLING & POST-PROCESSING

# KUSOR-3D

Beam-structure modelling, analysis and Eurocode 3 checking

**Modelling and post-processing functionalities**

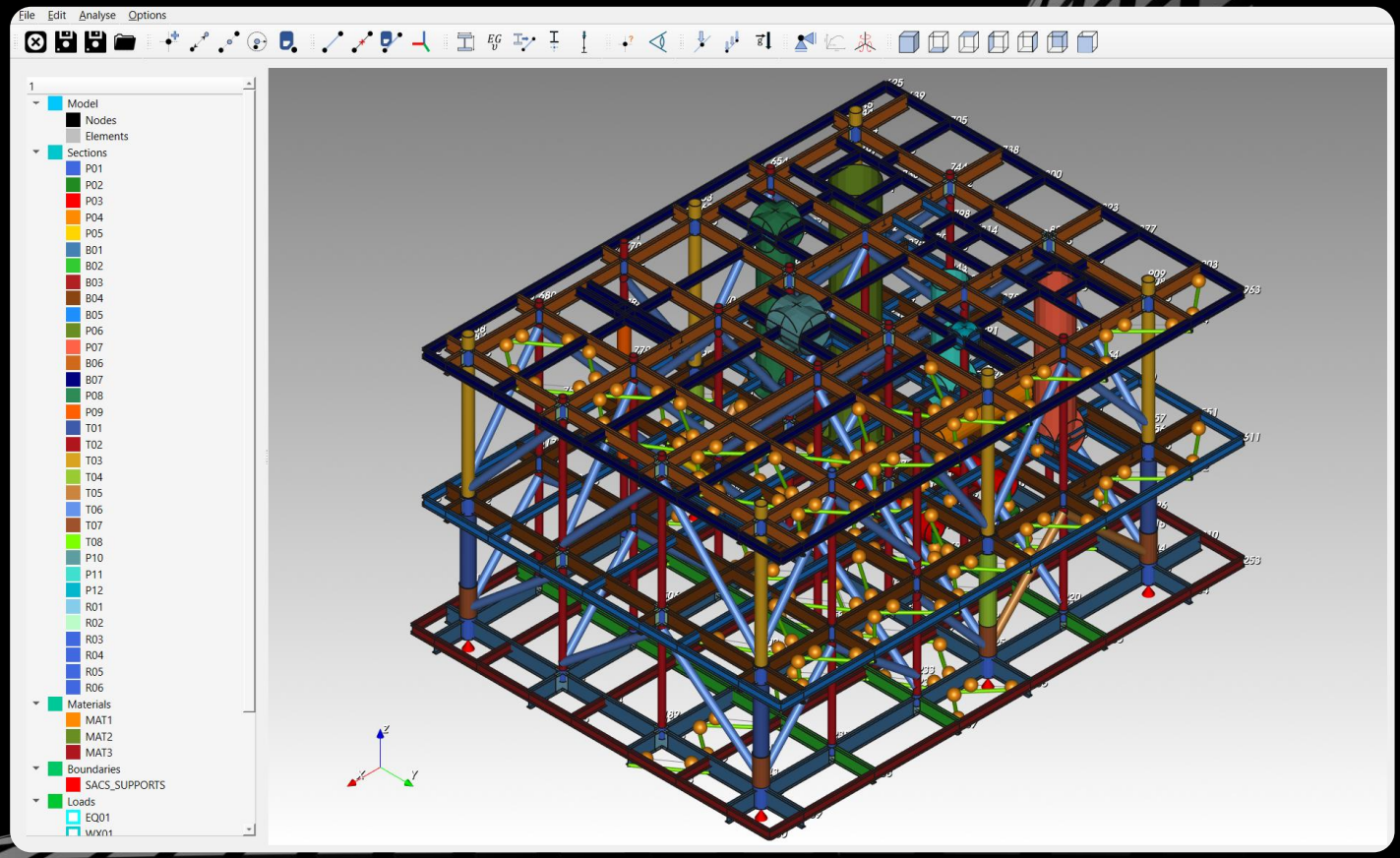


September 2026 · rev.17

KUSOR-3D

MODELING & SIMULATION By ENERGAS

KUSOR-3D
MODELING & SIMULATION By ENERGAS

# Simple to model, fast to check

KUSOR-3D is a desktop application for 3D beam structures: build the model, solve it and check every member to Eurocode 3, in one window.

## Build a model in a few steps

A handful of dialogs, picking directly in the 3D view, ten undo steps.

## Or start from a SACS deck

File › Import turns an existing SACS model into a ready-to-solve model: an offshore module of 1 436 members in a few seconds.

## Check rapidly

Static analysis and Eurocode 3 checks for every combination, the utilisation drawn on the model, and the full check of any member one click away.

## Results you can trust

Benchmarked against industrial software: utilisation within ±0.10 on 48 of 52 section groups, median ratio 0.984.

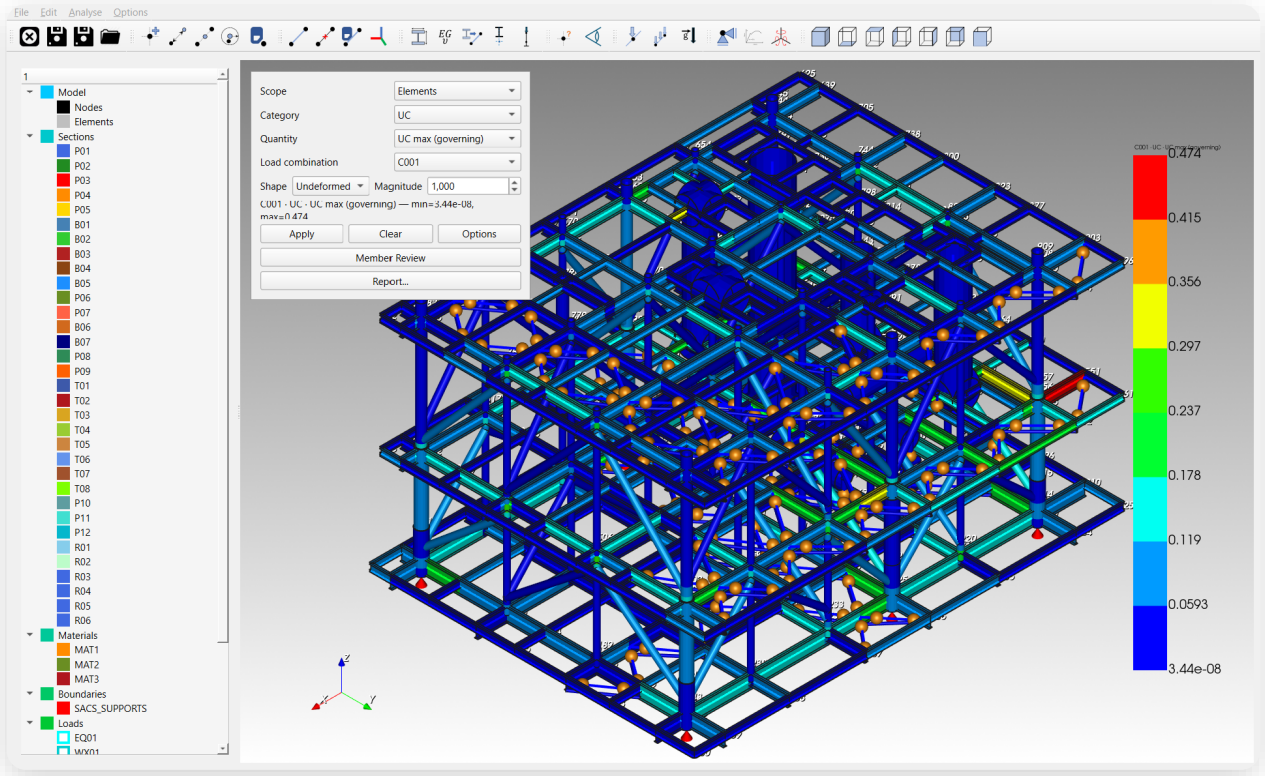


From model to utilisation map: Eurocode 3 check of an imported offshore module

WORKFLOW

# From geometry to a checked structure

The seven sections of this document follow the application workflow. The solver is presented separately.

| 01 | 02 | 03 | 04 | 05 | 06 | 07 |
|---|---|---|---|---|---|---|
| **GUI** | **Model** | **Sections** | **Member data** | **Loads and supports** | **SACS import** | **Post-processing** |
| Layout and toolbars<br>Working environment<br>Display options | Nodes<br>Elements<br>Local coordinates | Library (AISC)<br>Typical sections<br>Arbitrary sections<br>Mesh and properties | Section assignment<br>End offsets<br>End releases<br>Buckling lengths | Concentrated loads<br>Distributed loads<br>Gravity loads<br>Boundary conditions<br>Elastic supports | Import report<br>Member data<br>Loads and supports | Utilisation (UC)<br>Forces and stresses<br>Displacements<br>Support reactions<br>Member review<br>Calculation report |

Units: coordinates in metres, forces in N, moments in N·m, line loads in N/m; section geometry and properties in mm. Every model change can be undone (ten steps).

KUSOR-3D
MODELING & SIMULATION By ENERGAS

# The GUI layout

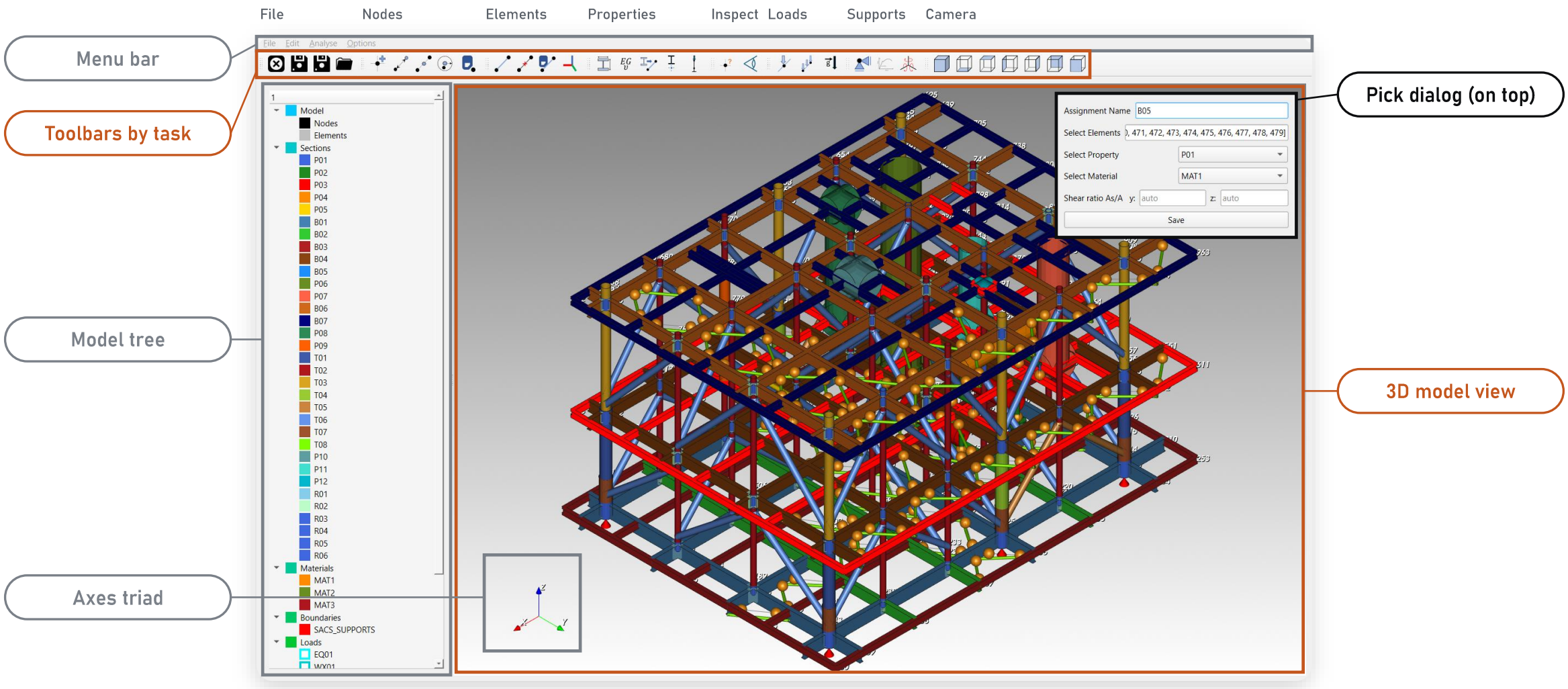


KUSOR-3D on an offshore module: assignment B05 picked in the 3D view, Assign Section open

KUSOR-3D
MODELING & SIMULATION By ENERGAS

# The working environment

- **Three panels:** the model tree on the left (nodes, elements, sections, materials, loads, boundaries, load cases, with show, hide, edit and delete), the 3D view, and toolbars grouped by task.
- **Picking in the 3D view:** every modelling dialog works on a selection made in the view. A click toggles a node or a member; Shift-drag boxes a group.
- **One dialog at a time:** the dialog stays on top, Save applies the change, closes it and records one undo step.
- **Inspection:** the Inspect button reads any node (coordinates, loads, supports) or member (section, group, offsets, releases, material); the Views button limits the display to a box in x, y, z.

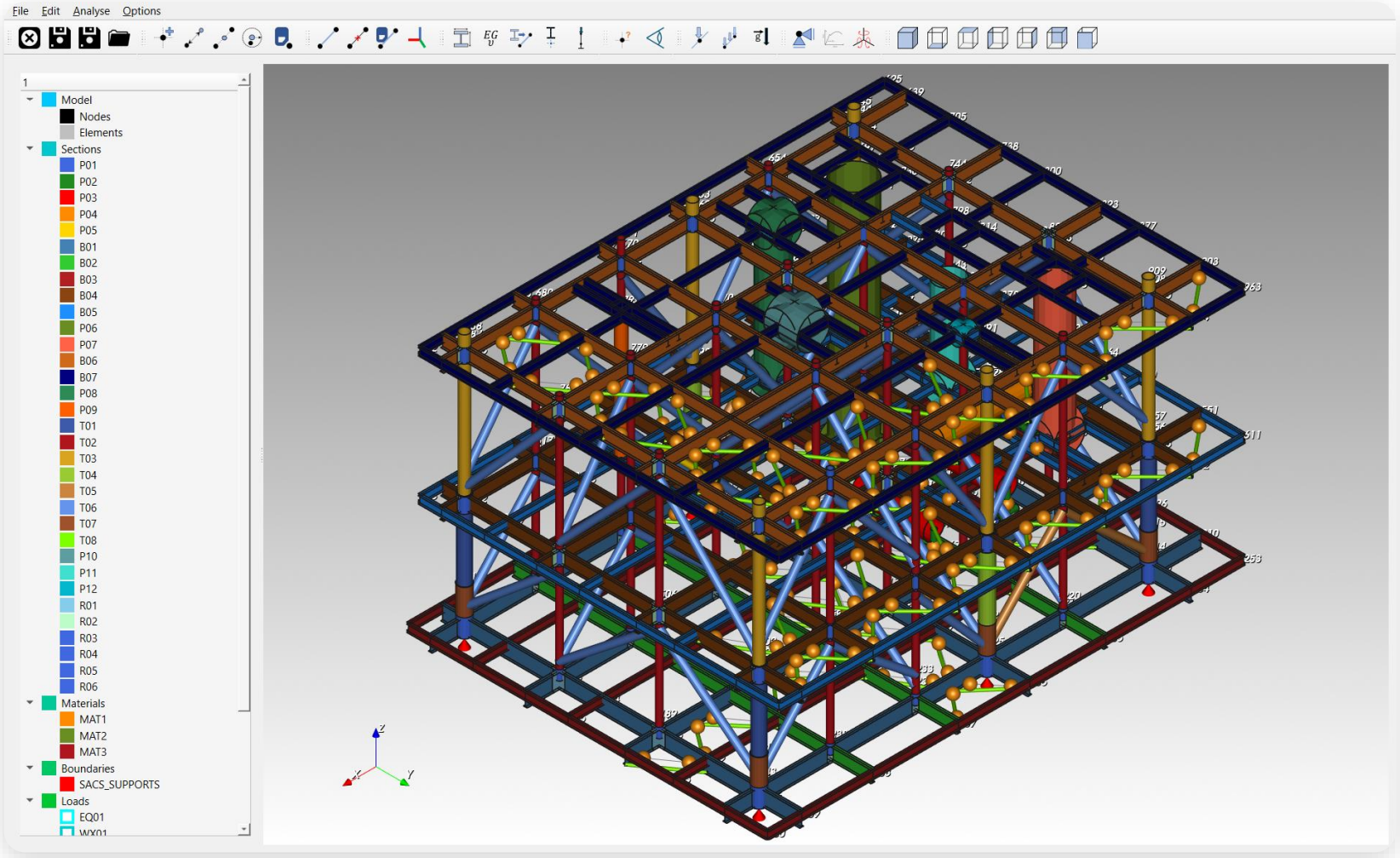


An imported offshore module (970 nodes, 1 436 members)

KUSOR-3D
MODELING & SIMULATION By ENERGAS

# Customising the working environment

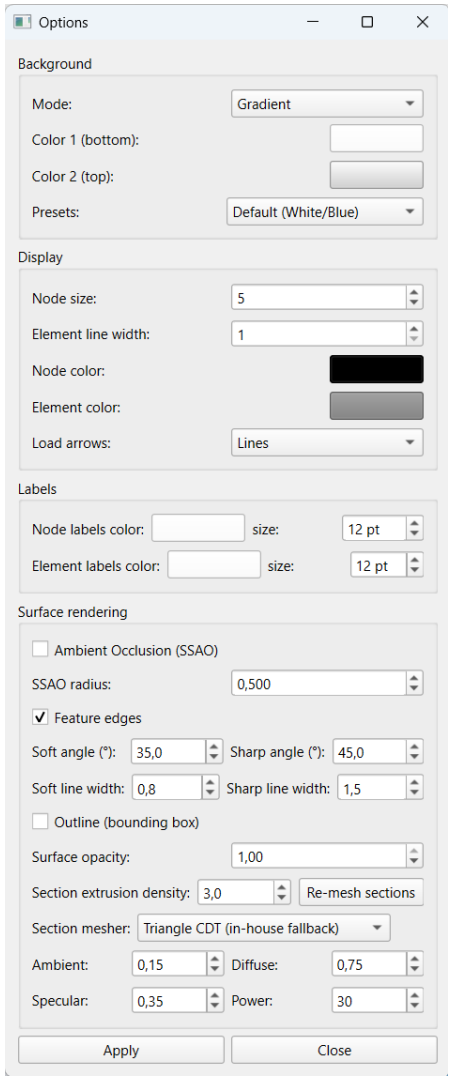


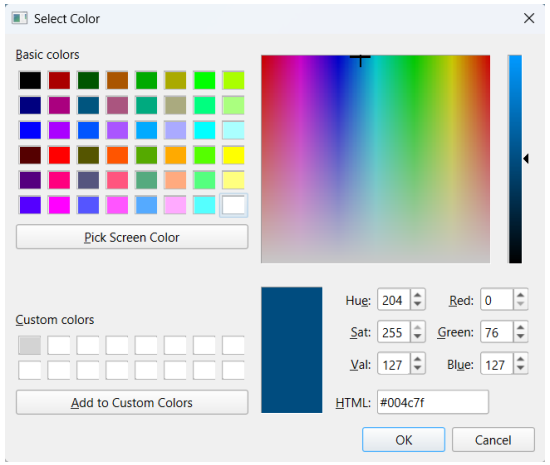


- **Customise the GUI:** the Options panel sets the background colours, the component colours and the label sizes. Choose a uniform or gradient background, and adjust the feature-edge widths and display angles of the surfaces.

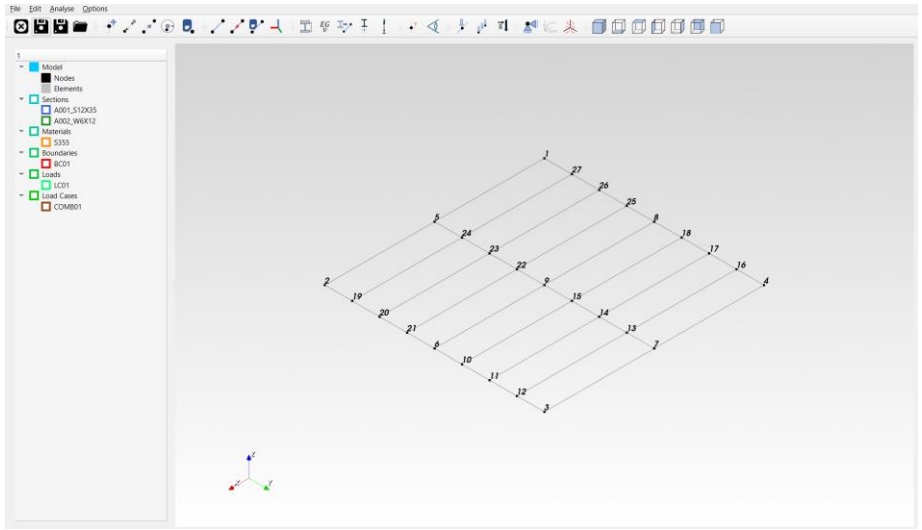

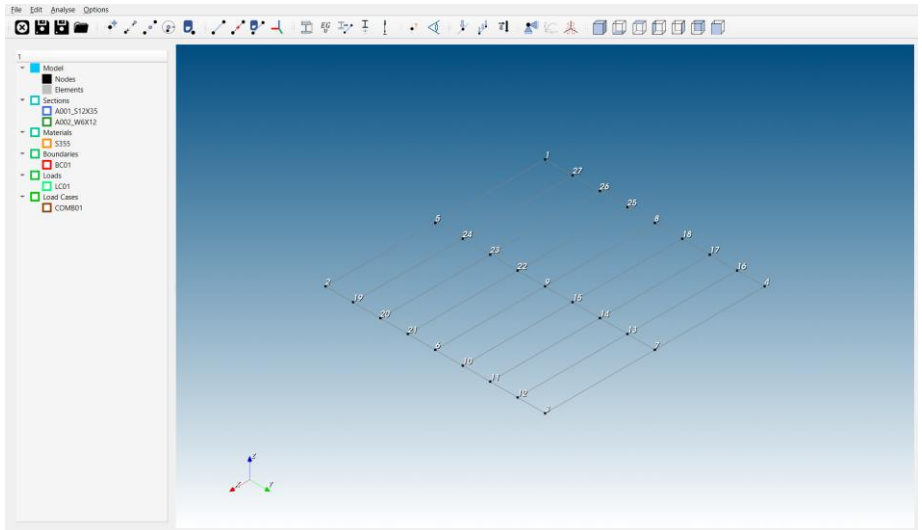

02

# Model

- Create nodes
- Mid point
- Node relative
- Create elements
- Subdivide elements
- Local coordinates

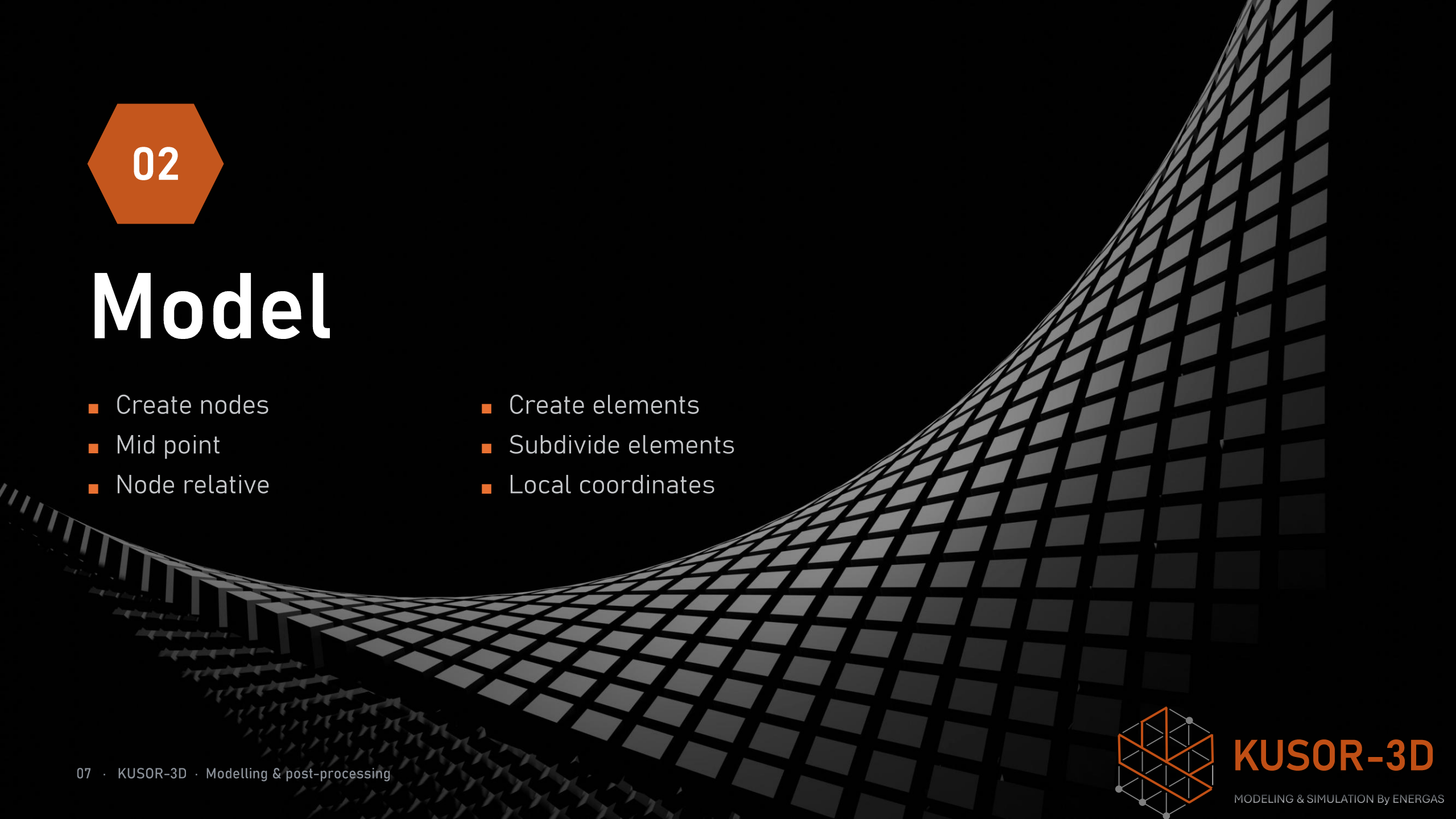



KUSOR-3D

MODELING & SIMULATION By ENERGAS

KUSOR-3D
MODELING & SIMULATION By ENERGAS

# Step 1 · Create nodes

- **Point x y z:** type the coordinates and Add; the dialog stays open for the next node.
- **Edit and delete:** from the tree or the Delete node button. Deleting a node removes its members and every load, support and property attached to them.

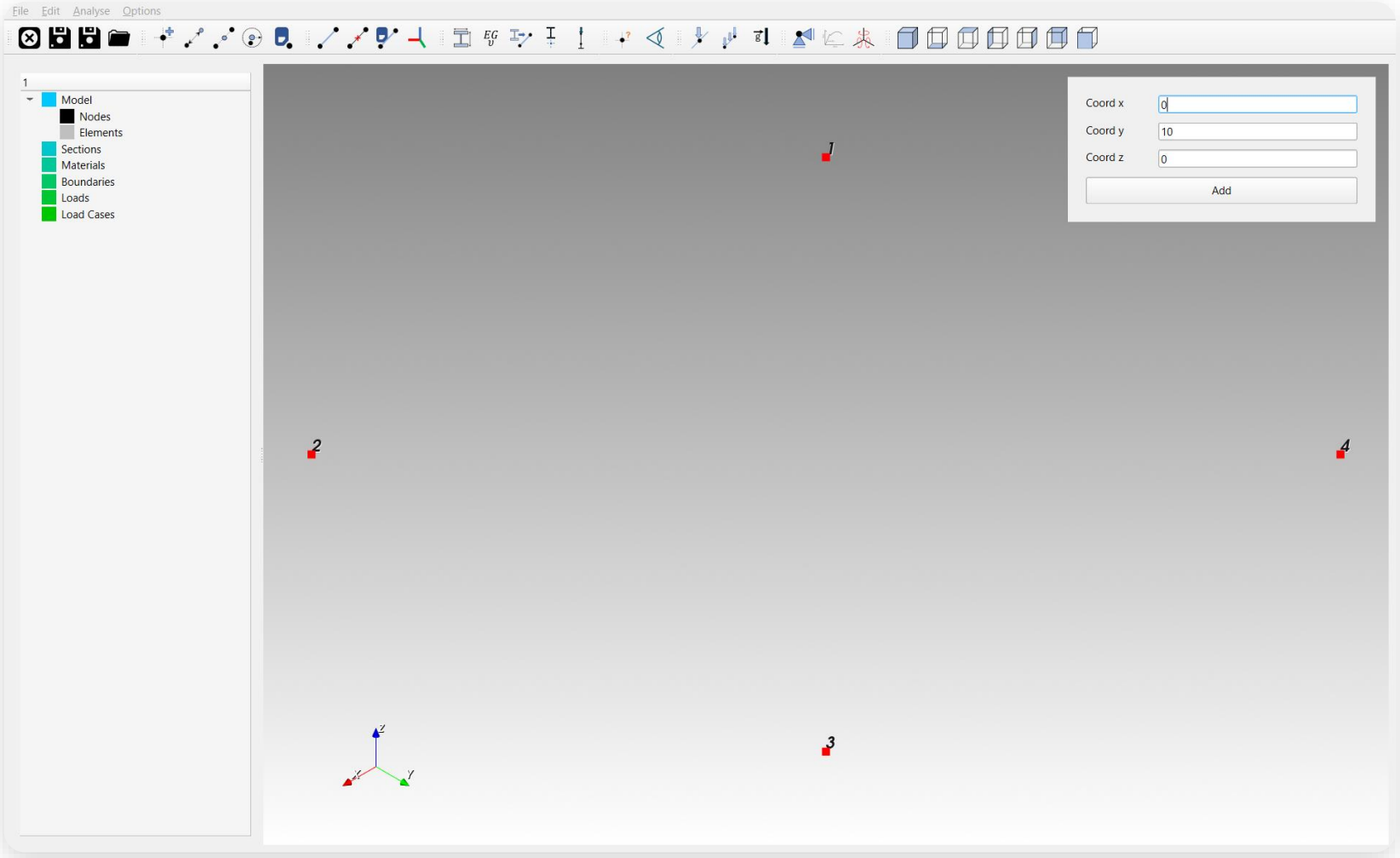


The four corners of a 10 m × 10 m deck: nodes 1 to 4 (in red), typed in Create Node

# Step 2 · Mid point

- **Mid point:** pick two nodes; the node is created at their midpoint.
- **Pick in the view or type the IDs:** the two fields fill with the picked nodes.

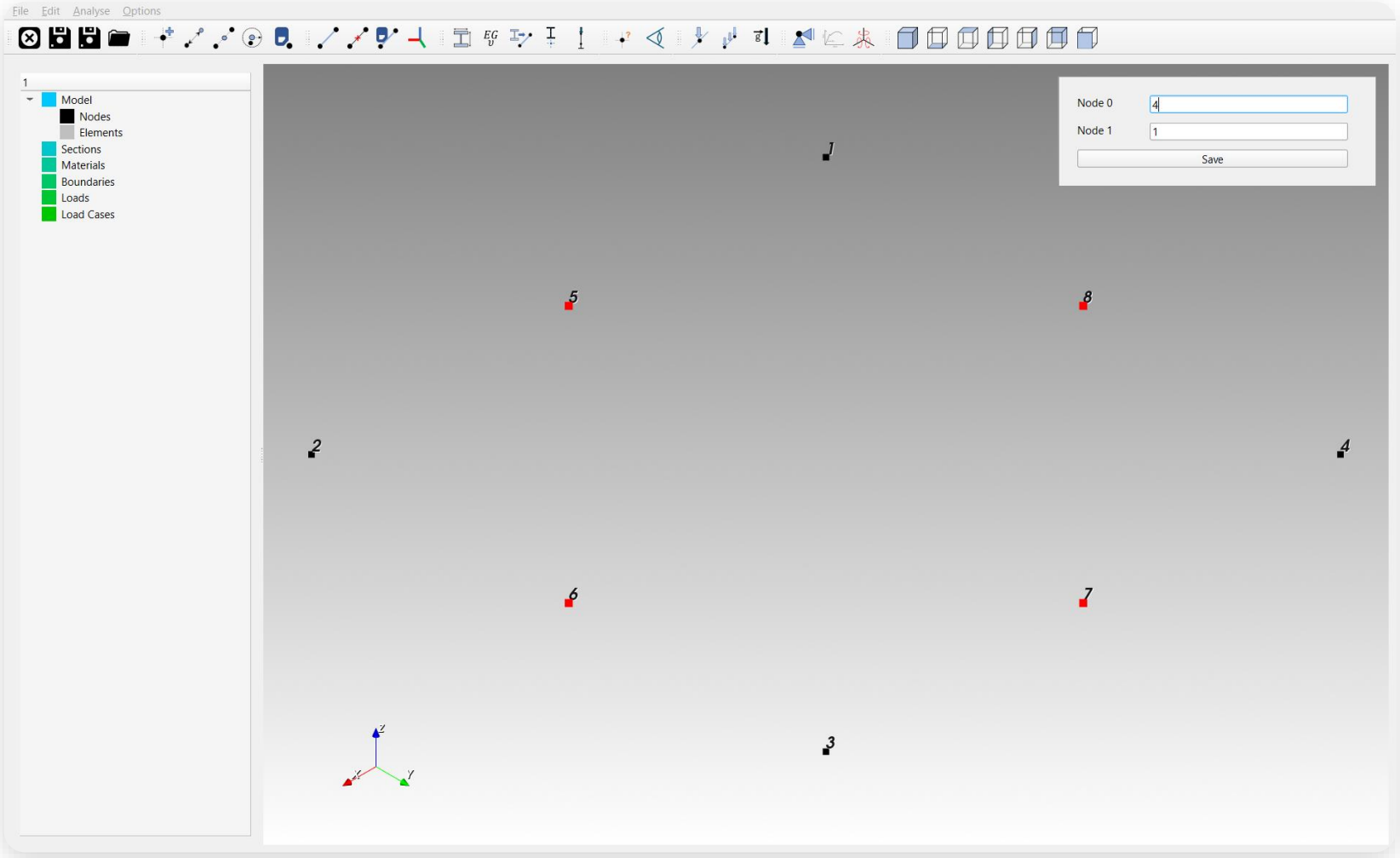


Nodes 5 to 8 (in red) at the midpoints of the four edges; node 8 between nodes 4 and 1

KUSOR-3D
MODELING & SIMULATION By ENERGAS

# Step 3 · Node relative

- **Point relative:** pick one or more nodes and give dx, dy, dz; one new node per picked node.
- **Several nodes at once:** one new node per picked node, same dx, dy, dz.

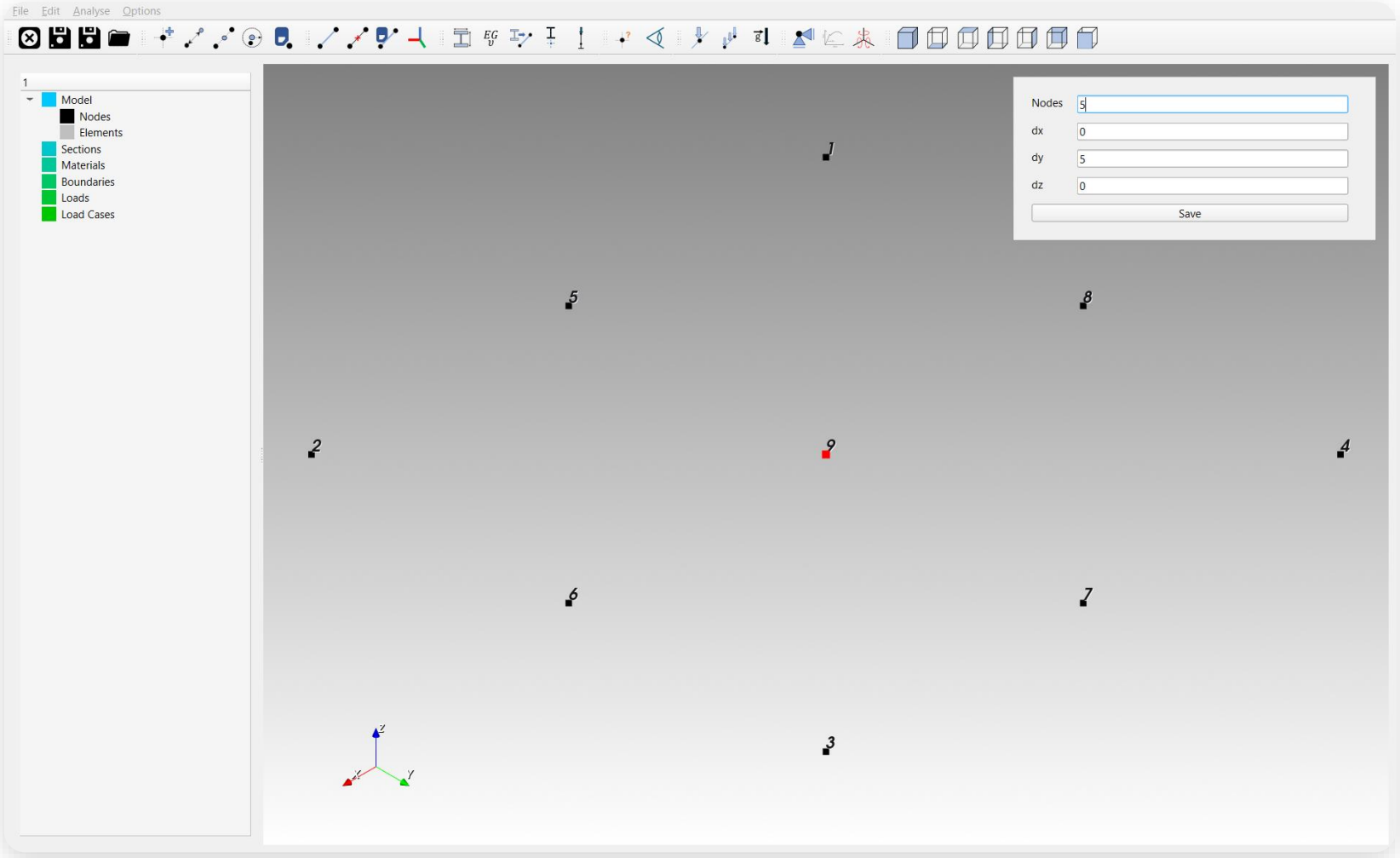


Node 9 (in red), the centre: node 5 + (0, 5, 0) m

KUSOR-3D
MODELING & SIMULATION By ENERGAS

# Step 4 · Create elements

- **Line:** pick node A then node B, or type the IDs; the member is created with its local axes and the dialog resets for the next one.
- **Delete element:** removes the member and all data attached to it.
- **Local axes at creation:** every member gets its local frame immediately (see Local coordinates).

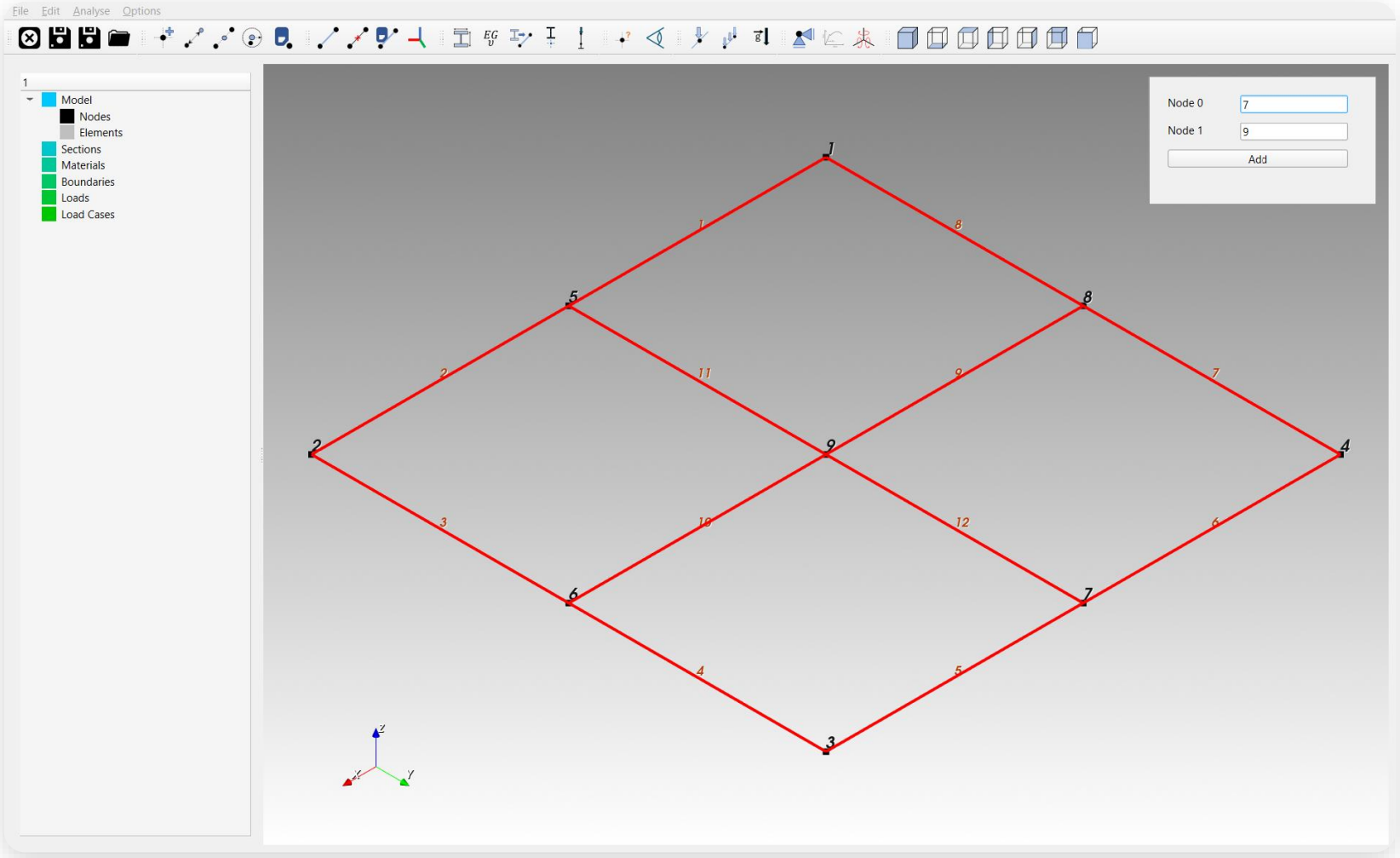


12 members (in red) along the edges and the two centre lines; member IDs in orange

KUSOR-3D
MODELING & SIMULATION By ENERGAS

# Step 5 · Subdivide: number of parts, fixed length

## Equal parts

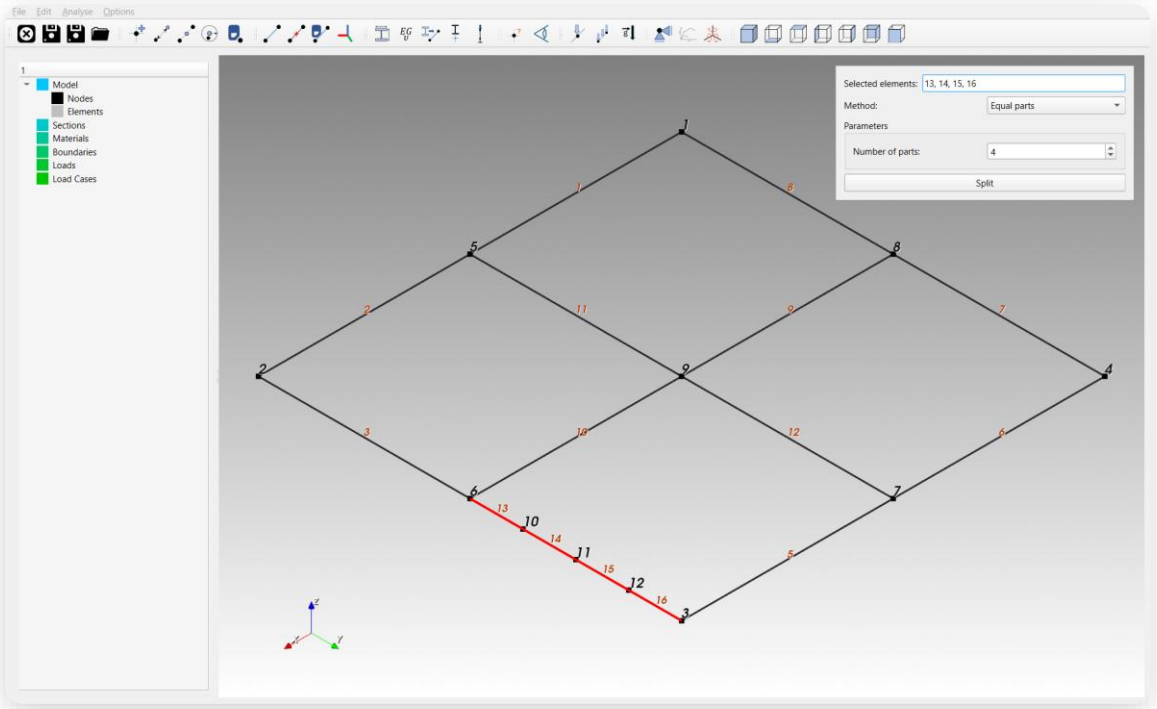


Member 6–3 in 4 equal parts (in red): nodes 10, 11, 12

- **Split element:** equal parts, length ratio, fixed length from node A, or at a given X, Y or Z coordinate picked from a node or typed.

## Fixed length

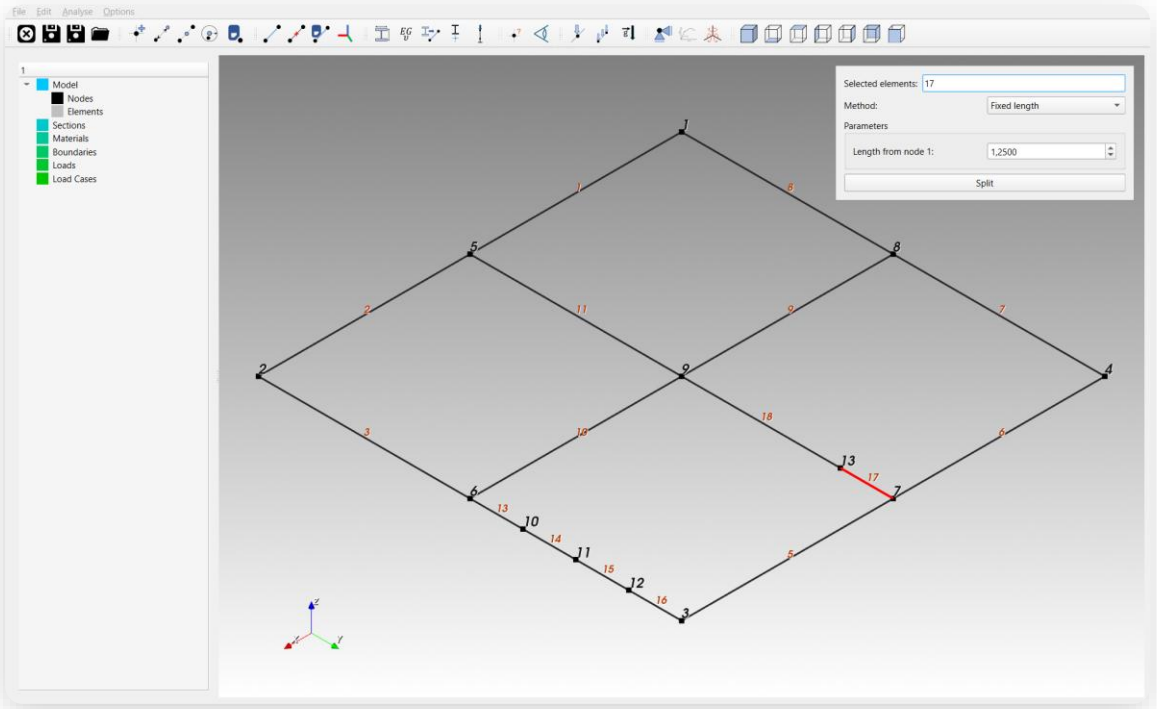


Member 7–9: a cut 1.25 m from node 7 gives node 13 (new piece in red)

- **A split keeps the member data consistent:** section, material and group are inherited; releases and offsets stay at the two physical ends; loads are partitioned; buckling lengths are kept.

KUSOR-3D
MODELING & SIMULATION By ENERGAS

# Step 6 · Subdivide at a coordinate or a ratio

## Y or X coordinate

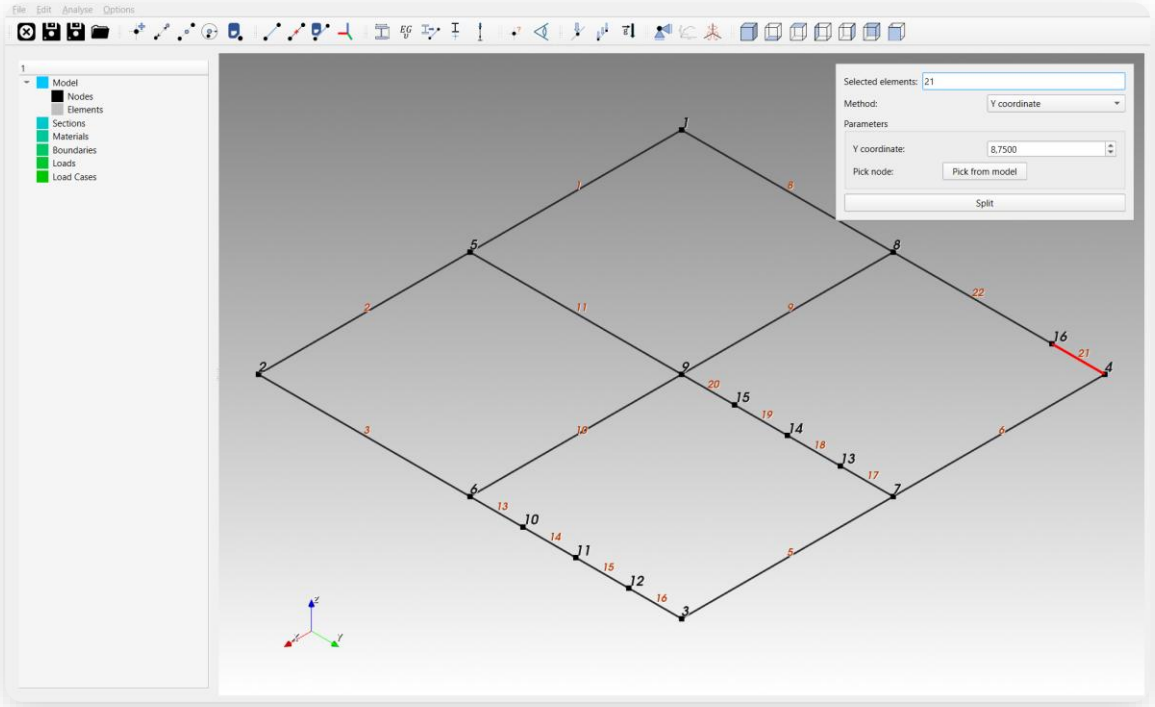


Member 4–8 cut at y = 8.75 m: node 16 (new piece in red)

- **X, Y or Z coordinate:** the cut plane at the typed value, or at a node picked in the view.

## Length ratio

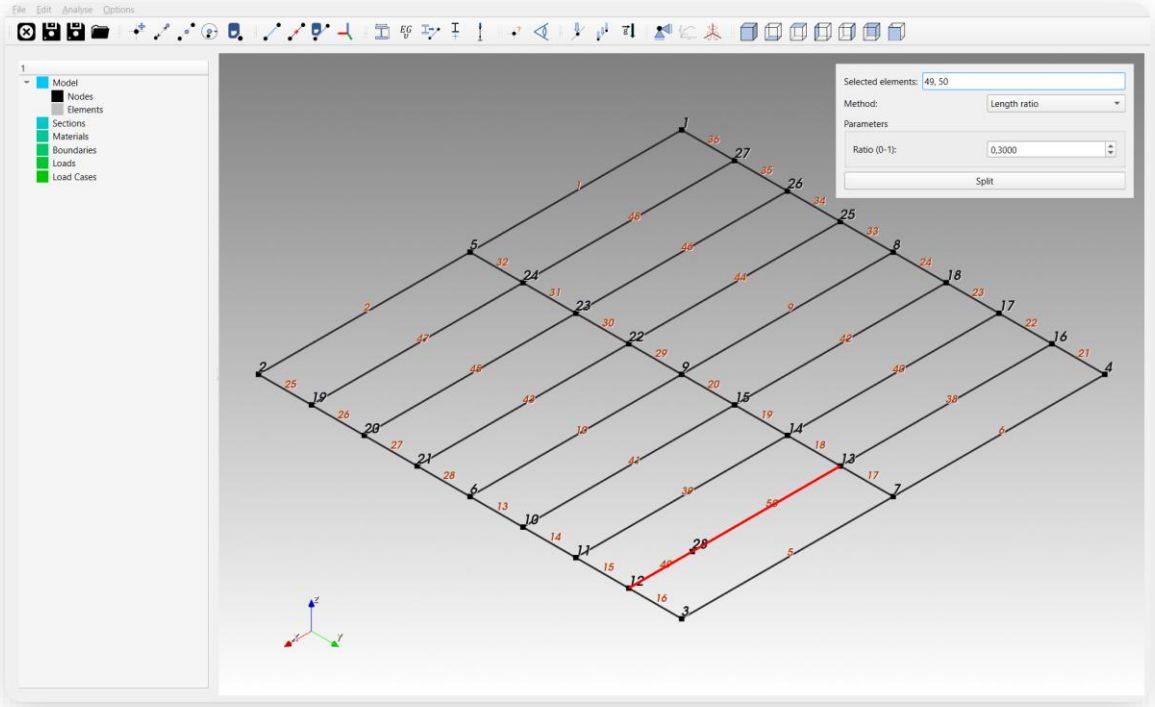


A cross beam cut at ratio 0.3 from node 12: node 28 (example; the two pieces in red)

- **Ratio:** a cut at a fraction (0–1) of the member length.

KUSOR-3D
MODELING & SIMULATION By ENERGAS

# Step 7 · The finished grid

- **Girders:** the three lines x = 0, 5, 10 m split every 1.25 m (equal parts, fixed length, Y cut).
- **Cross beams: 12 new members added with Line between the new nodes. With the 6 members created in Step 4 on the lines y = 0, 5 and 10 m, the completed model has 18 cross-beam members.**
- **Result:** 27 nodes, 42 members — identical to the reference deck model (same coordinates, same connectivity).

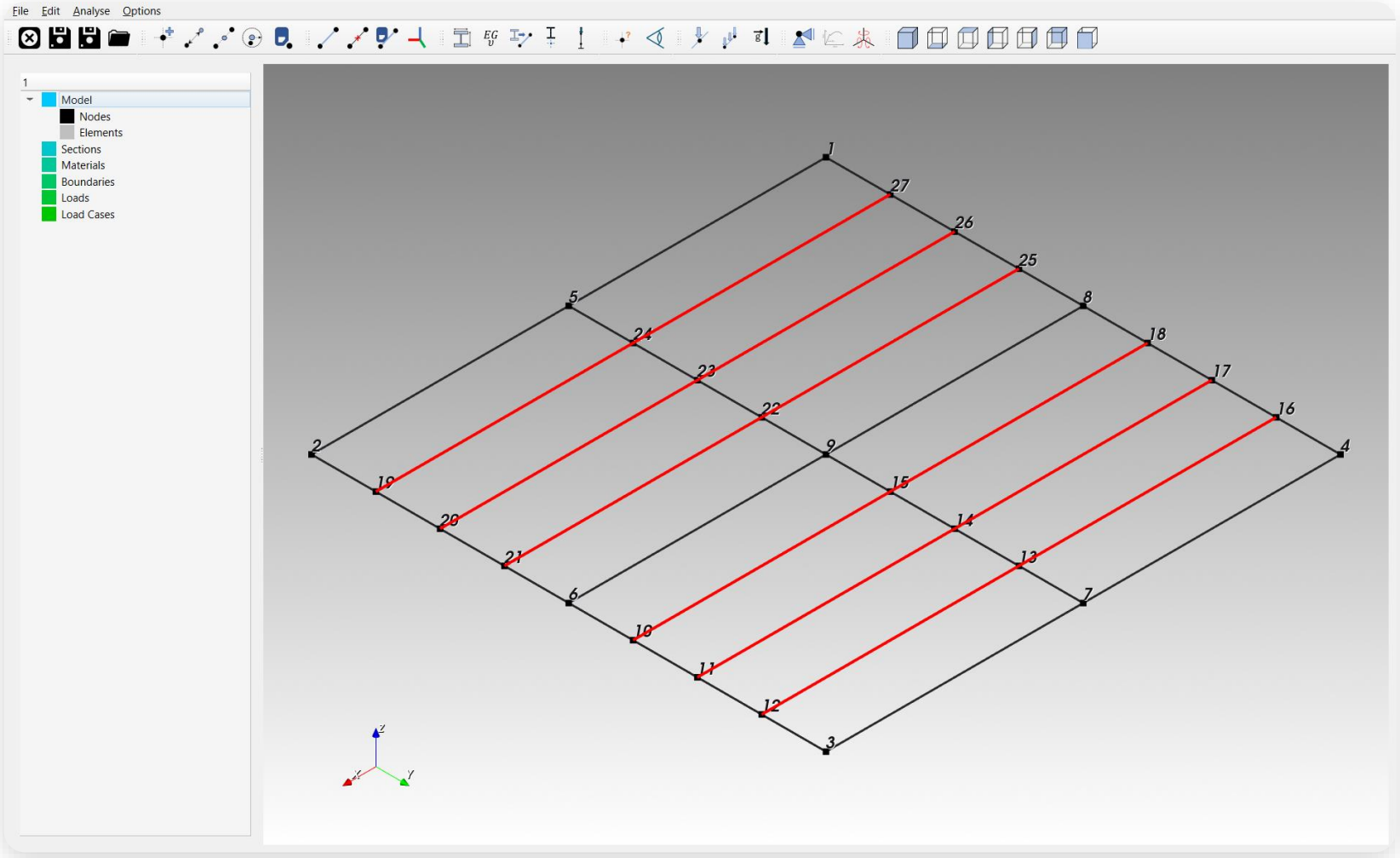


The deck grillage: 27 nodes and 42 members; node IDs shown, the 12 new cross-beam members in red

KUSOR-3D
MODELING & SIMULATION By ENERGAS

# Local coordinates

- **Local x:** from end A (first node) to end B.
- **Local y:** horizontal, y = Z × x normalised; local z completes the right-handed triad. For a vertical member, y is taken along global X.
- **Display:** Toggle coords draws the triad at every member midpoint, x red, y green, z blue, all triads the same size.

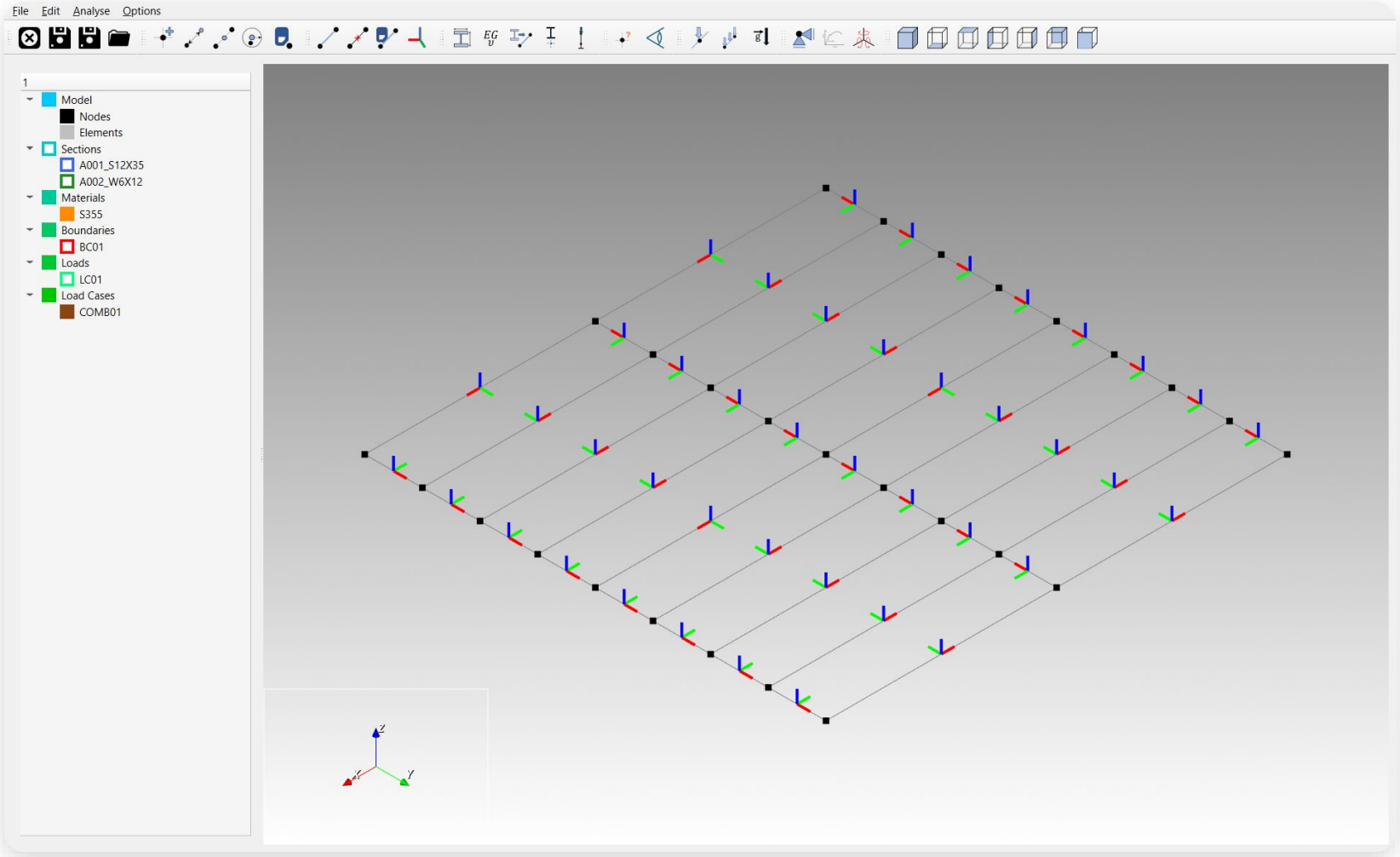


Toggle coords: the local axes of the 42 deck members

03

# Sections

- Library sections
- Typical sections
- Arbitrary sections
- Mesh generation
- Properties calculation



KUSOR-3D

MODELING & SIMULATION By ENERGAS

# Library sections

- **Select Section Profile:** database, section type, section; the profile is drawn with its dimensions and its tabulated properties are listed.
- **Shipped database:** AISC (W, S, M, HP, WT, MT, ST, L, C, MC, HSS rectangular, HSS round, PIPE).
- **Properties:** the tabulated values are kept (A, Iy, Iz, Wel, Wpl, J, Cw); principal-axis data is completed by the software.
- **Fabrication:** hot-rolled for open shapes, cold-formed for HSS and PIPE, for the Eurocode buckling curves.
- **Eurocode profiles:** IPE, HE, UPN, RHS, CHS and L are supported through CSV tables and can be added to the database.

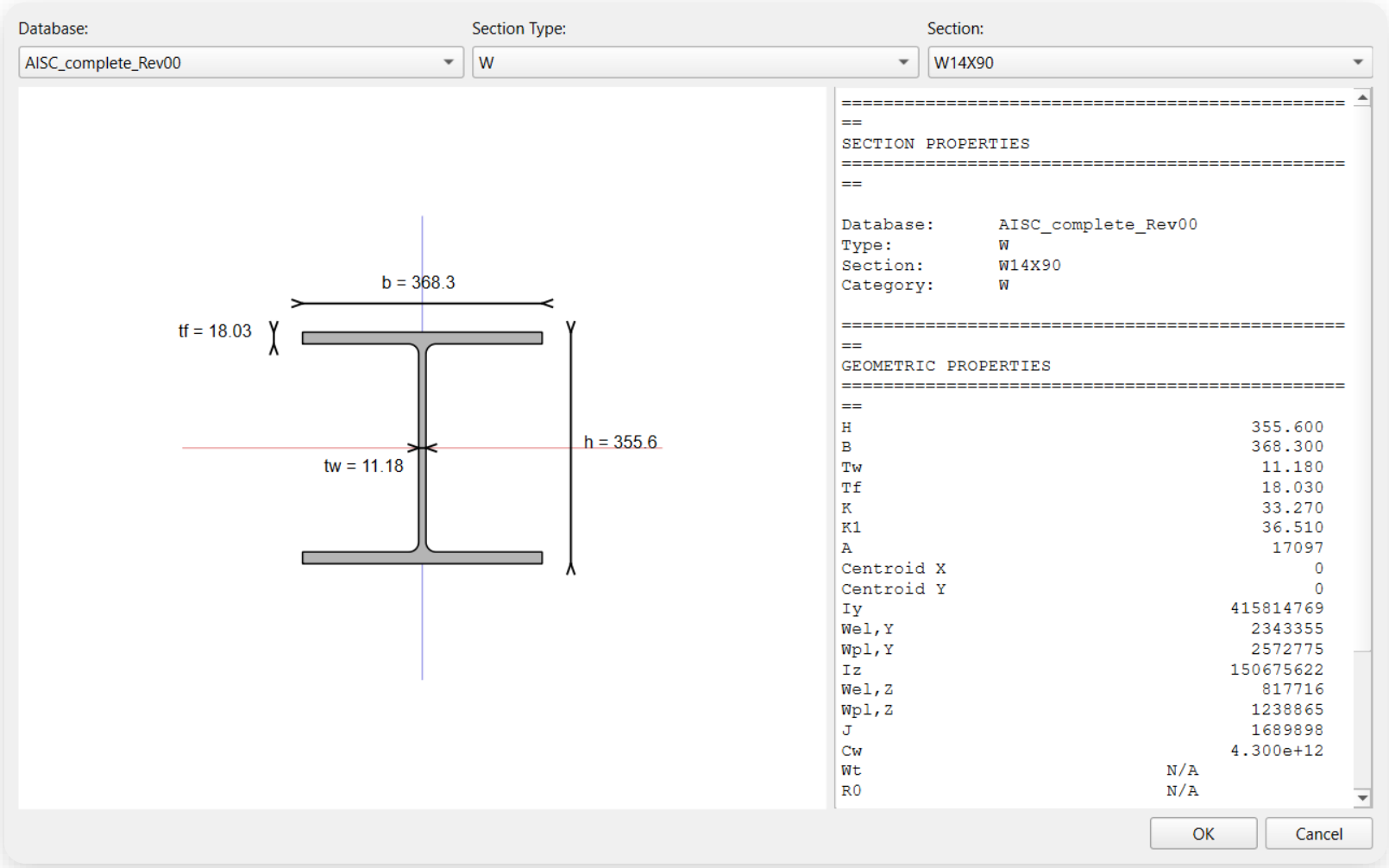


Select Section Profile — AISC W14X90

KUSOR-3D
MODELING & SIMULATION By ENERGAS

# Typical sections

- **Ten parametric families:** I, H, monosymmetric I (plate girder), T, channel, angle, RHS, CHS, solid rectangle, solid round.
- Dimensions in mm with a live preview.
- **Fabrication:** hot-rolled, cold-formed or welded, recorded for the Eurocode buckling curves.
- **Prismatic or tapered:** parameters at end A and end B; the taper is expanded into analysis subdivisions.
- **Computed, not tabulated:** a typical section is meshed and its properties calculated exactly like a drawn section.

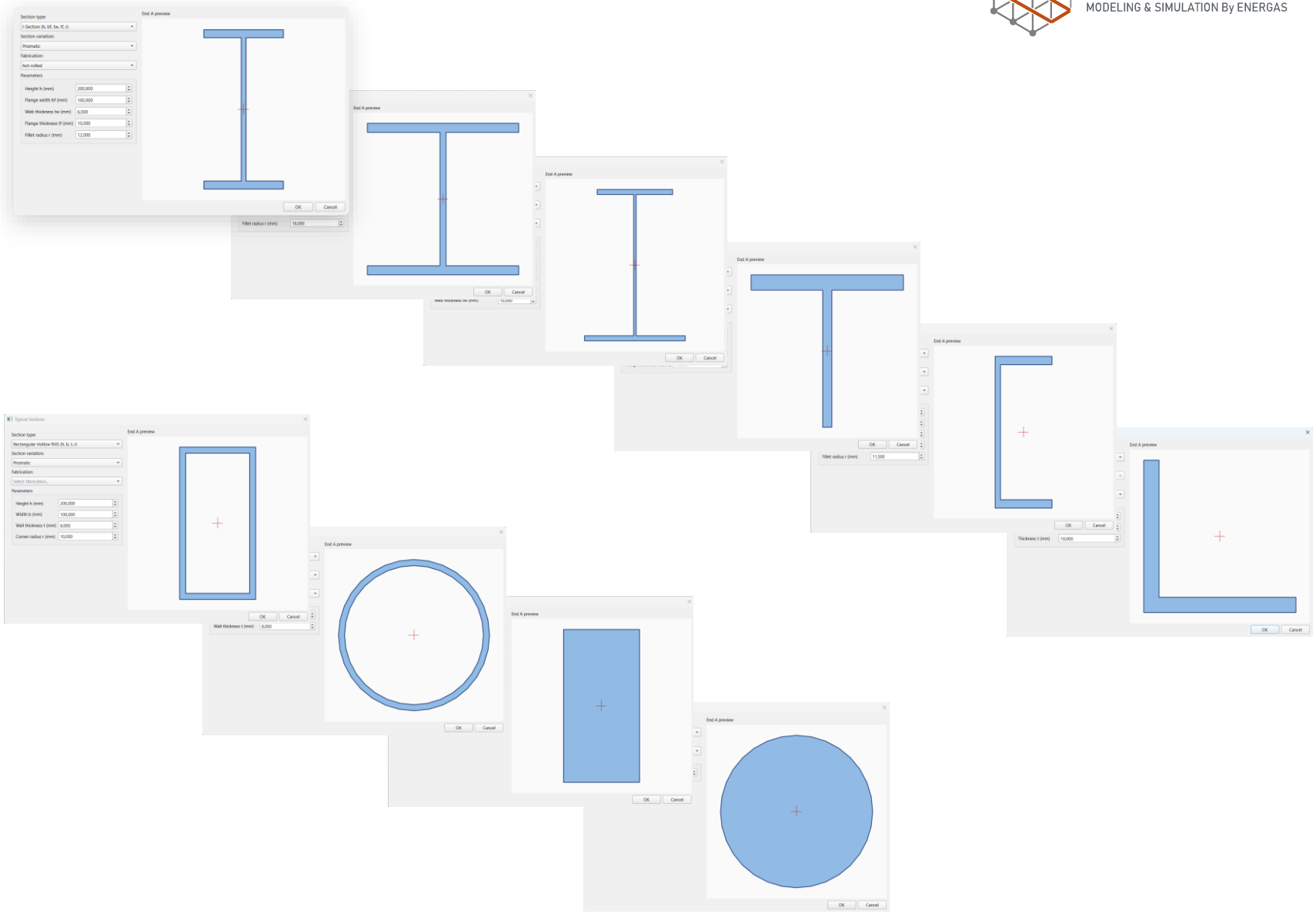

KUSOR-3D
MODELING & SIMULATION By ENERGAS

# Arbitrary sections

- **2D sketcher:** points typed or clicked with grid snap, lines, circles, arcs, fillets.
- **Constraints:** distance, X and Y distance, angle, parallel, perpendicular, with an optional constraint solver.
- **Holes:** any closed inner contour is treated as a hole automatically.
- **Register:** the drawing is saved as a section under a name, then meshed and computed like the others; saved sections can be reloaded and edited.
- **Extrude 3D:** preview of the section swept along a member length.

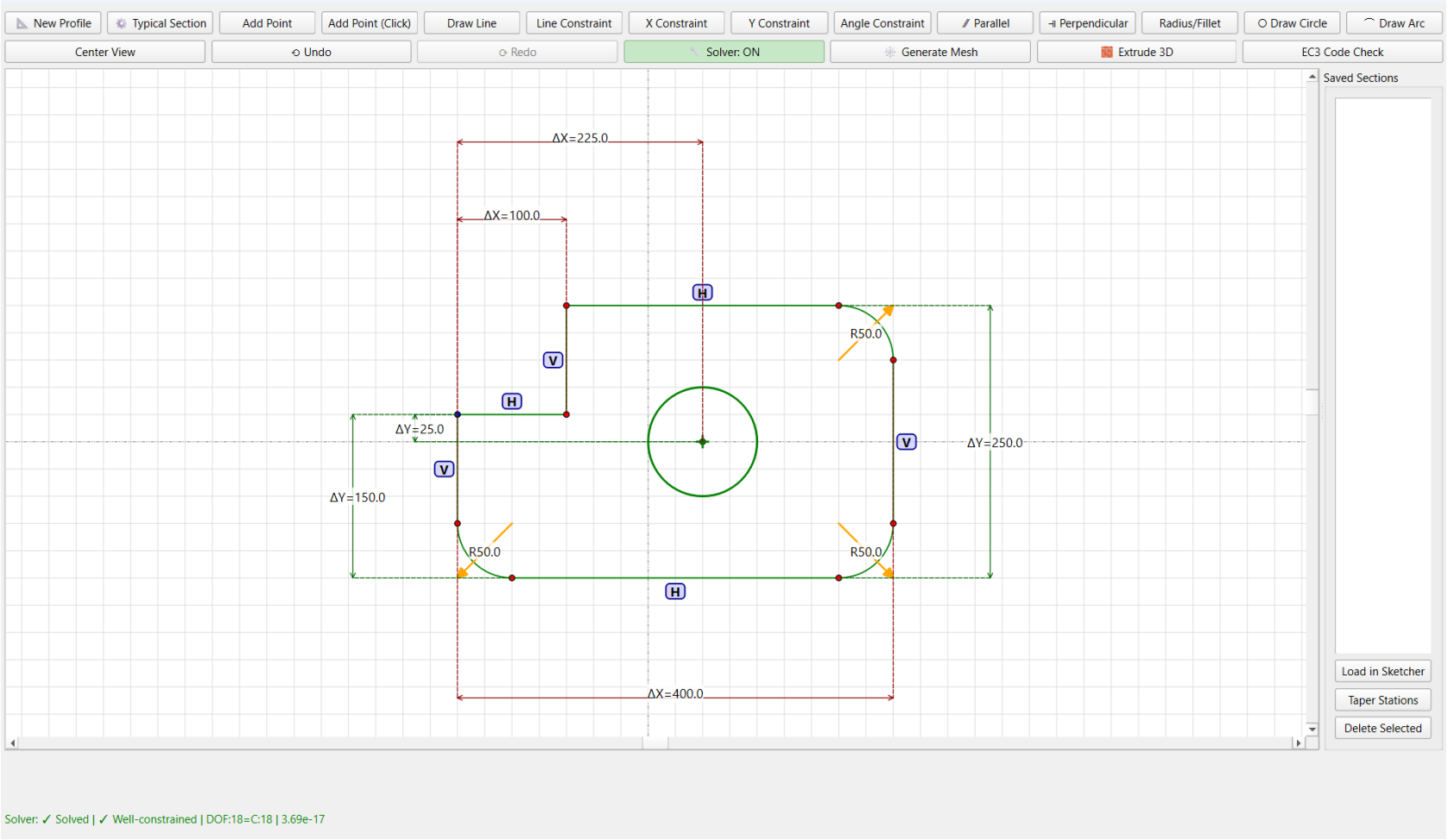


The sketcher with a drawn section: outer contour and a round hole

# Mesh generation

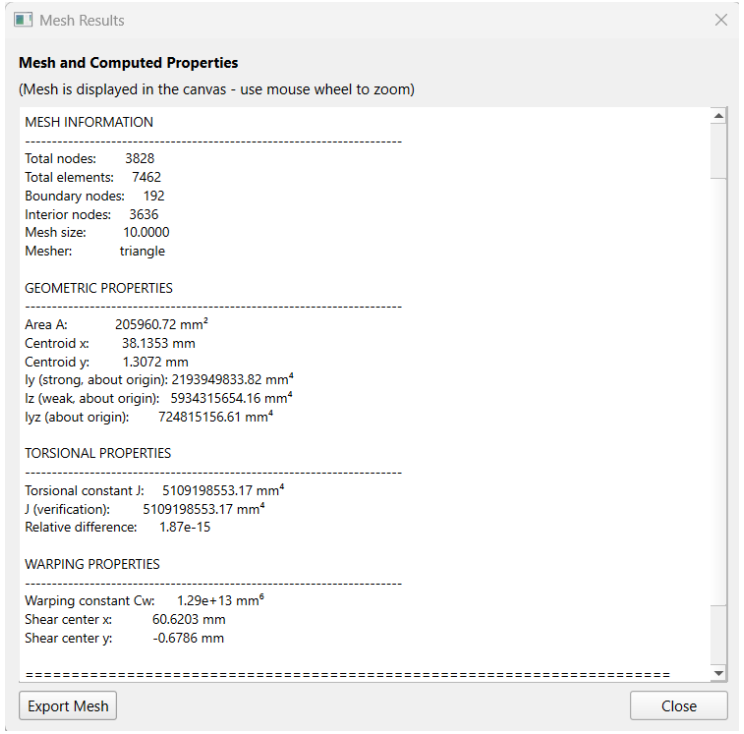


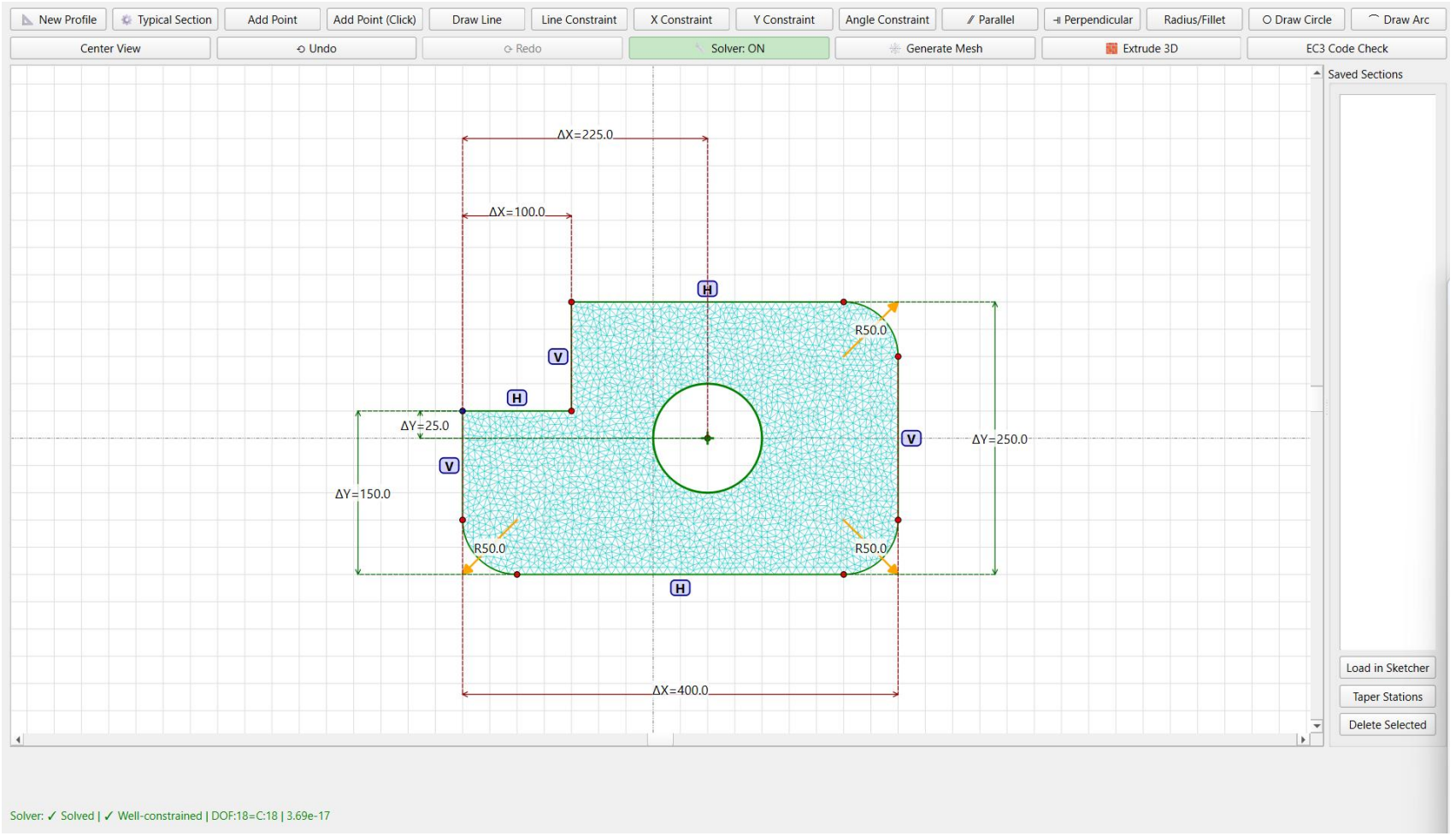


- **Generate Mesh:** triangular finite-element mesh of the section. Mesh size proposed from the geometry (smallest wall / 3) or set by the user.
- **Compute properties:** the section properties are computed on the mesh by finite element analysis.

KUSOR-3D
MODELING & SIMULATION By ENERGAS

# Properties calculation

- **One computation path for every section:** area and centroid; Iy, Iz, Iyz and principal axes; Wel and Wpl in both directions; torsional constant J by the Prandtl stress function, computed in two independent forms as a check; warping constant Cw and shear centre by the warping function; shear areas.
- **Convention:** y strong axis, z weak axis (Eurocode). Units: mm.
- **Accuracy:** the linear triangles converge from below on J and Cw: about −2 to −5 % on open sections at the default density, within 0.1 % on closed sections; the density can be increased.
- **Example:** IPE 400 with r = 21 mm, default mesh (510 nodes, 686 triangles), against the catalogue values.

| Property | Computed | Catalogue | Difference |
|---|---|---|---|
| A (mm²) | 8 450 | 8 450 | 0.0 % |
| Iy (mm⁴) | 231.4 ×10⁶ | 231.2 ×10⁶ | +0.1 % |
| Iz (mm⁴) | 13.18 ×10⁶ | 13.17 ×10⁶ | +0.1 % |
| Wel,y (mm³) | 1 157 ×10³ | 1 156 ×10³ | +0.1 % |
| Wpl,y (mm³) | 1 308 ×10³ | 1 307 ×10³ | +0.1 % |
| Wel,z (mm³) | 146.4 ×10³ | 146.4 ×10³ | 0.0 % |
| Wpl,z (mm³) | 229.0 ×10³ | 229.0 ×10³ | 0.0 % |
| J = It (mm⁴) | 491.6 ×10³ | 512.7 ×10³ | −4.1 % |
| Cw = Iw (mm⁶) | 4.83 ×10¹¹ | 4.90 ×10¹¹ | −1.4 % |

Catalogue: ArcelorMittal Sections, V2023-5 (A 84.5 cm², Iy 23 120 cm⁴, Iz 1 317 cm⁴, It 51.27 cm⁴, Iw 490 ×10³ cm⁶). J and Cw are the mesh-dependent quantities; the geometric properties match to the rounding of the tables.

04

# Member data

- Section assignment
- Member offsets
- Member releases
- Buckling length



KUSOR-3D
MODELING & SIMULATION By ENERGAS

KUSOR-3D
MODELING & SIMULATION By ENERGAS

# Step 8 · Assign sections

- **Assign Section:** pick the members, choose a section and a material, Save. Automatic names (A001_IPE 400, …) or your own.
- **One assignment per member:** reassigning moves it; the dialog asks Change, Exclude or Cancel.
- **Own copy:** each assignment holds its own copy of the section, so editing a template never changes an existing assignment.
- **Shear areas: optional As/A ratio per axis; blank = from the section geometry.**

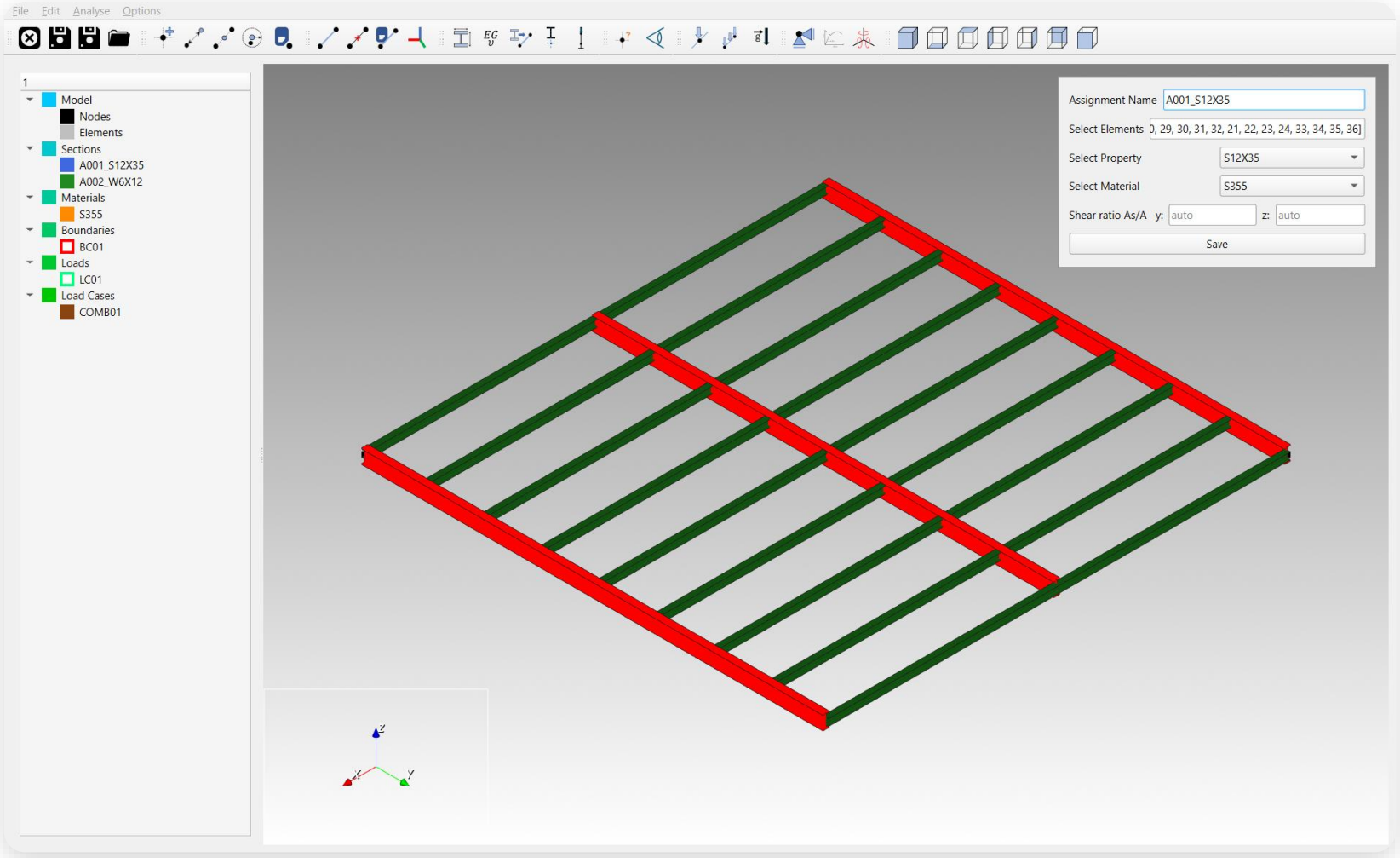


Girders A001_S12X35 (24 members) in red; cross beams A002_W6X12 (18 members: 6 from Step 4 and 12 added in Step 7)

KUSOR-3D
MODELING & SIMULATION By ENERGAS

# Step 9 · Member offsets

- **Member end offsets:** dX, dY, dZ at end A and end B, in global or member-local axes, in metres.
- **Meaning:** the vector from the structural node to the member end. The flexible member spans the two offset points and is tied to the nodes by rigid links.
- **Stored in global axes:** values are absolute; all-zero removes the offset.

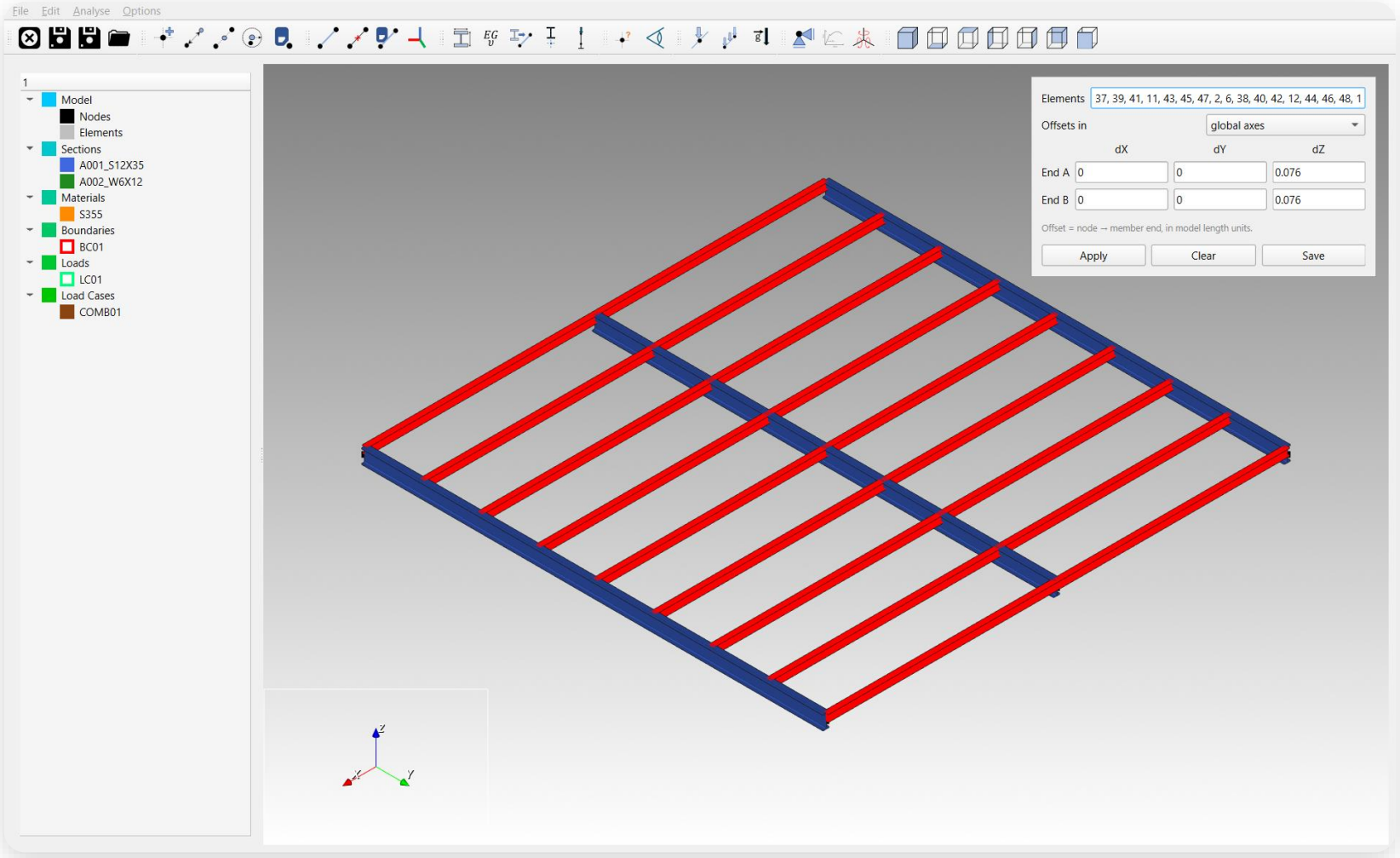


Beams W6X12 raised by dZ = +0.076 m at both ends: top flange flush with the girders ((305 − 153.2) / 2 mm)

KUSOR-3D
MODELING & SIMULATION By ENERGAS

# Step 10 · Member releases

- **Member end releases:** 2 × 6 check boxes, end A and end B, in the member local axes: N, Vy, Vz, T, My, Mz.
- **Released = free:** the solver condenses the released degrees of freedom statically.
- Apply keeps the dialog open; picking a single member shows its current pattern.
- **Markers:** an orange sphere just inside each released end, in the 3D view; they can be hidden.

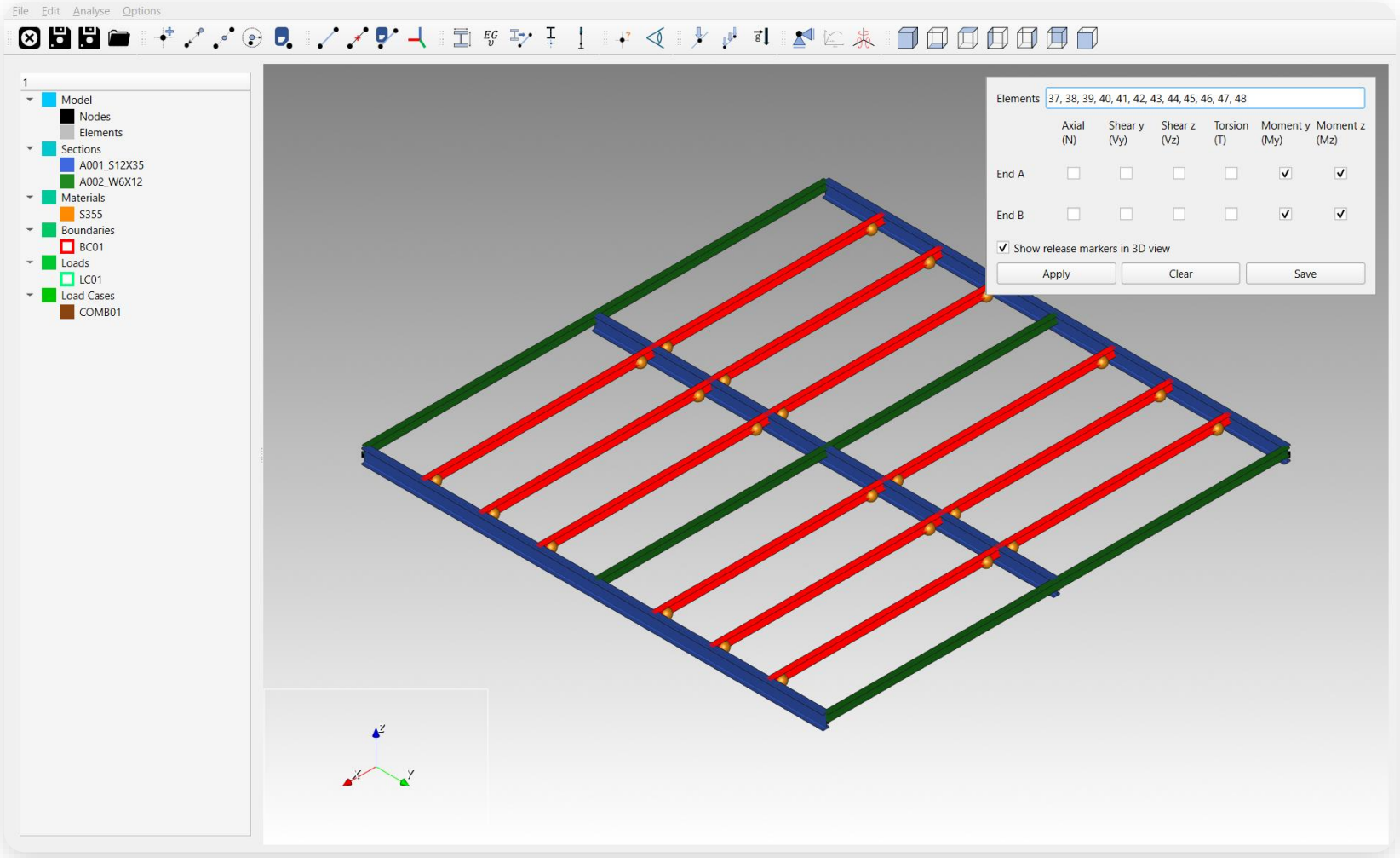


The 12 newly added cross-beam members: My and Mz released at both ends (orange markers).

KUSOR-3D
MODELING & SIMULATION By ENERGAS

# Step 11 · Buckling length

- **Two input modes per member:** Ky, Kz effective-length factors applied to the member length, or Ly, Lz unbraced lengths in metres (blank = joint-to-joint length).
- **Lb:** the lateral-torsional buckling length, always a length in metres (blank = member length).
- **Defaults without input:** K = 1, L = member length, Lb = L.
- **Eurocode 3 checks:** C1, C2 and zg are set per load combination by the check itself, not entered: tabulated values (NCCI SN003a) for the recognised moment diagrams, otherwise the conservative uniform-moment C1 = 1.0. kz = kw = 1 (fork supports).

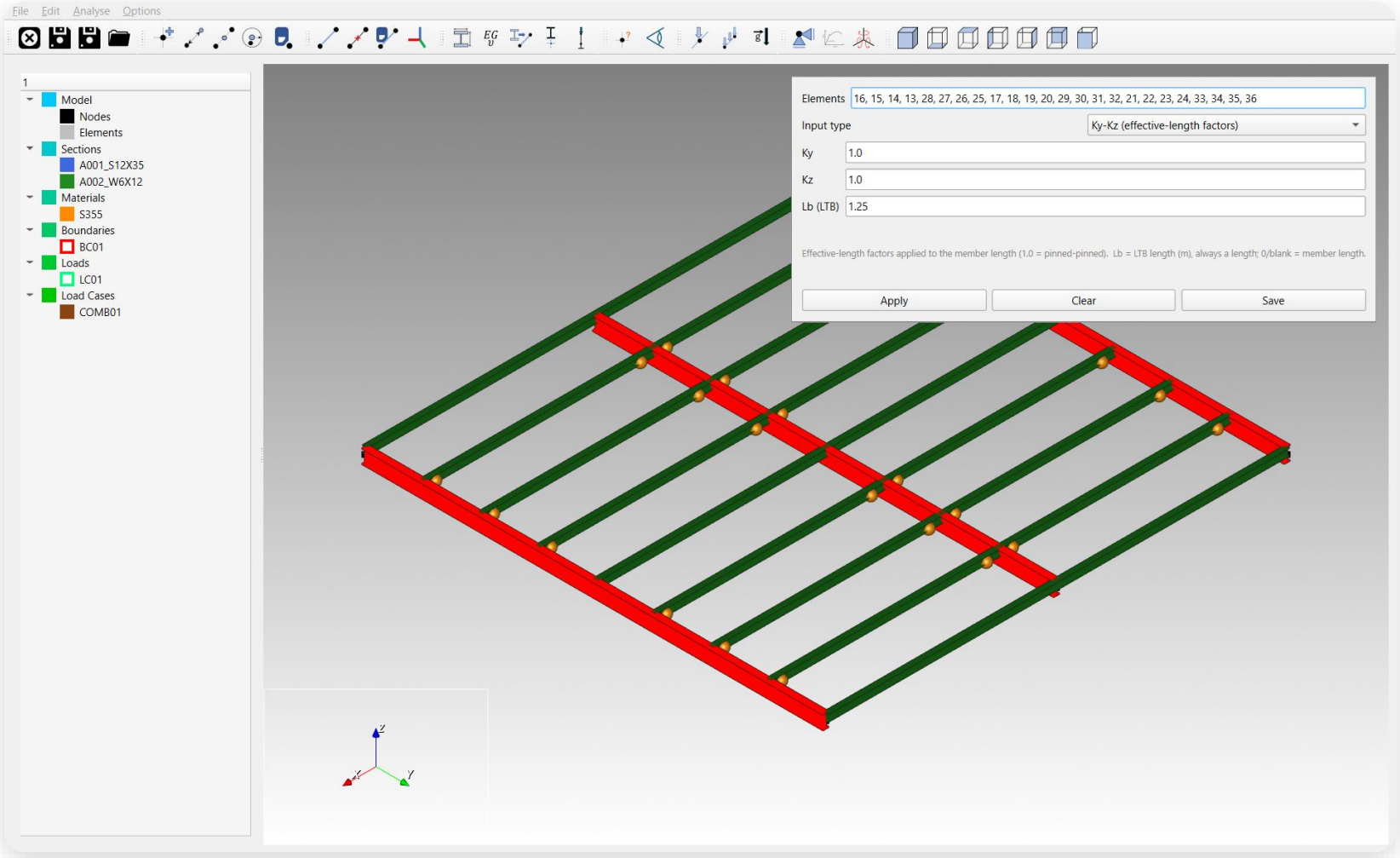


Girders: K = 1, lateral-torsional length Lb = 1.25 m (braced by the cross beams)

05

# Loads and supports

- Concentrated loads
- Distributed loads
- Gravity loads
- Boundary conditions
- Elastic supports



KUSOR-3D

MODELING & SIMULATION By ENERGAS

KUSOR-3D
MODELING & SIMULATION By ENERGAS

# Step 12 · Concentrated loads

- **Pick nodes or type their IDs:** Fx, Fy, Fz, Mx, My, Mz in global axes (N, N·m); new or existing load condition; Add, then Save.
- Several entries on one node accumulate.
- **Load conditions and load cases:** conditions are combined with factors in the load case table of the Analysis window; each load case also selects its support set.
- **3D view:** force arrows and moment rings, one colour per condition; show or hide from the tree.

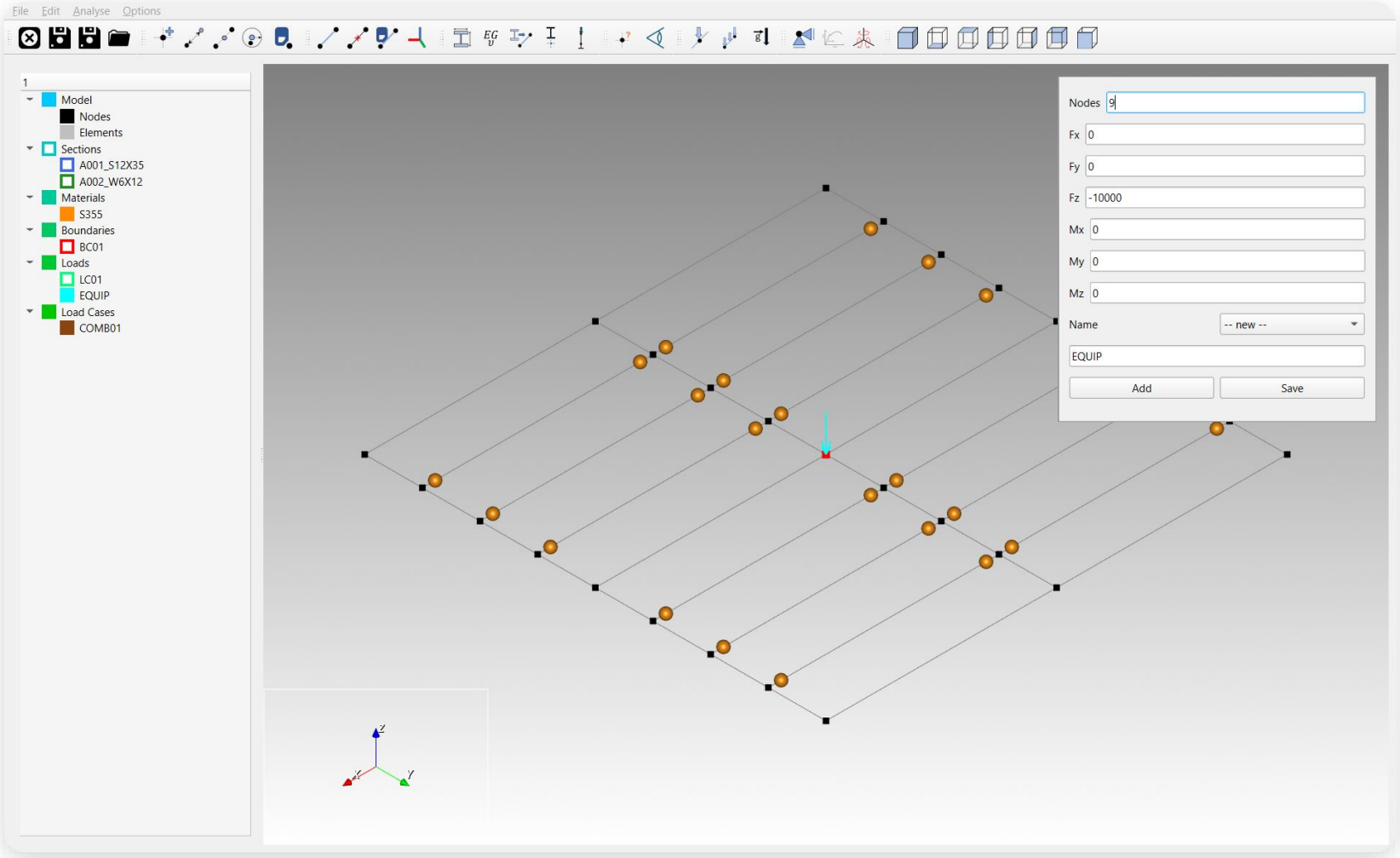


EQUIP: Fz = −10 kN at the centre node 9

KUSOR-3D
MODELING & SIMULATION By ENERGAS

# Step 13 · Distributed loads

- **Line load:** pick the members, qx, qy, qz in N/m, frame global (for example gravity) or local (member axes), condition name; Add, then Save.
- **Exact at solve time:** converted to work-equivalent end forces on the flexible span and transferred through the rigid links.
- **Partial-span, trapezoidal and concentrated member loads: supported by the solver, imported with the model and kept through splits; an entry dialog for them is planned (not yet available).**
- **3D view:** arrows along the loaded members.

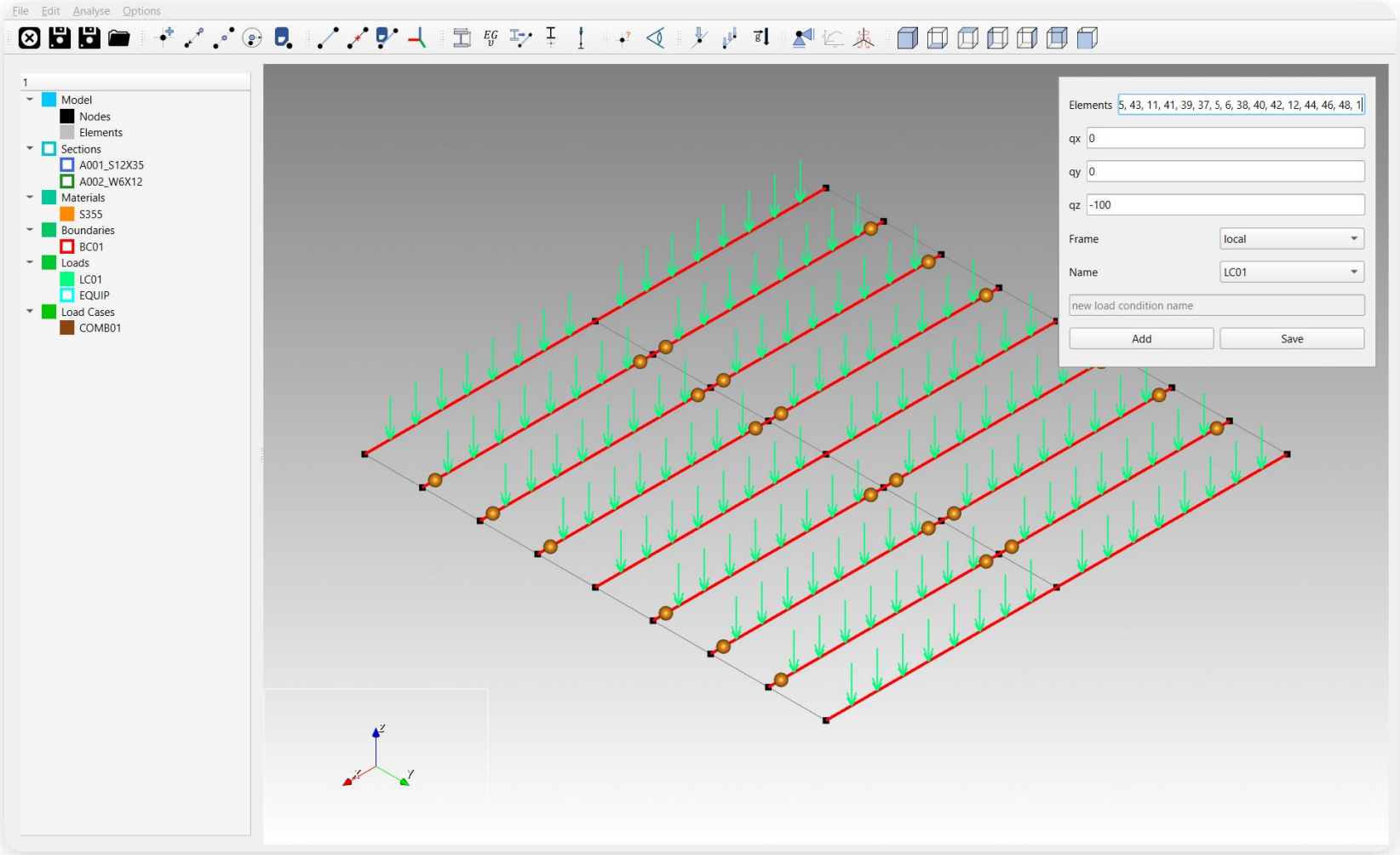


LC01: qz = −100 N/m in the local axes on the 18 cross-beam members (A002_W6X12)

KUSOR-3D
MODELING & SIMULATION By ENERGAS

# Step 14 · Gravity loads

- **Dead load:** a definition rather than a list of loads: an acceleration vector (default 0, 0, −9.81 m/s²) and an optional angular acceleration about a center.
- **Generated when the analysis starts:** w = ρ A a per member from the current sections, materials and assignments, on the actual (offset) member line.
- **Always up to date:** re-sectioning a member cannot leave a stale weight; members without section or material are reported.
- Combined like any condition in the load cases.

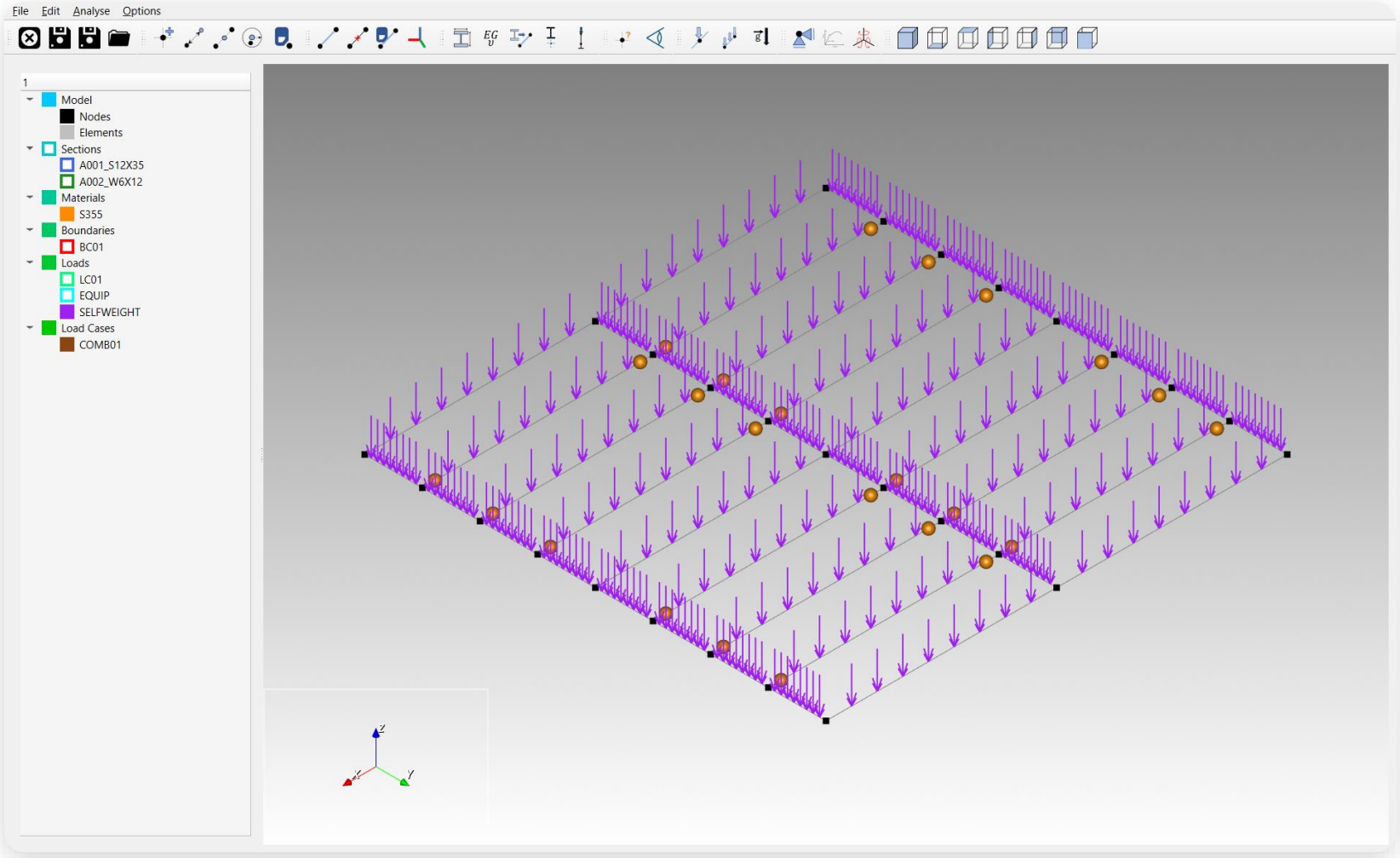


SELFWEIGHT generated on all 42 members from their sections and S355

KUSOR-3D
MODELING & SIMULATION By ENERGAS

# Step 15 · Boundary conditions

- **Boundary:** pick nodes or type their IDs; Tx, Ty, Tz, Rx, Ry, Rz with 1 = fixed and 0 = free; name the support set.
- **Several sets may coexist:** each load case selects the set it uses.
- Deleting a set from the tree also removes it from the load cases that used it.
- **3D view:** a support symbol on every fixed direction.

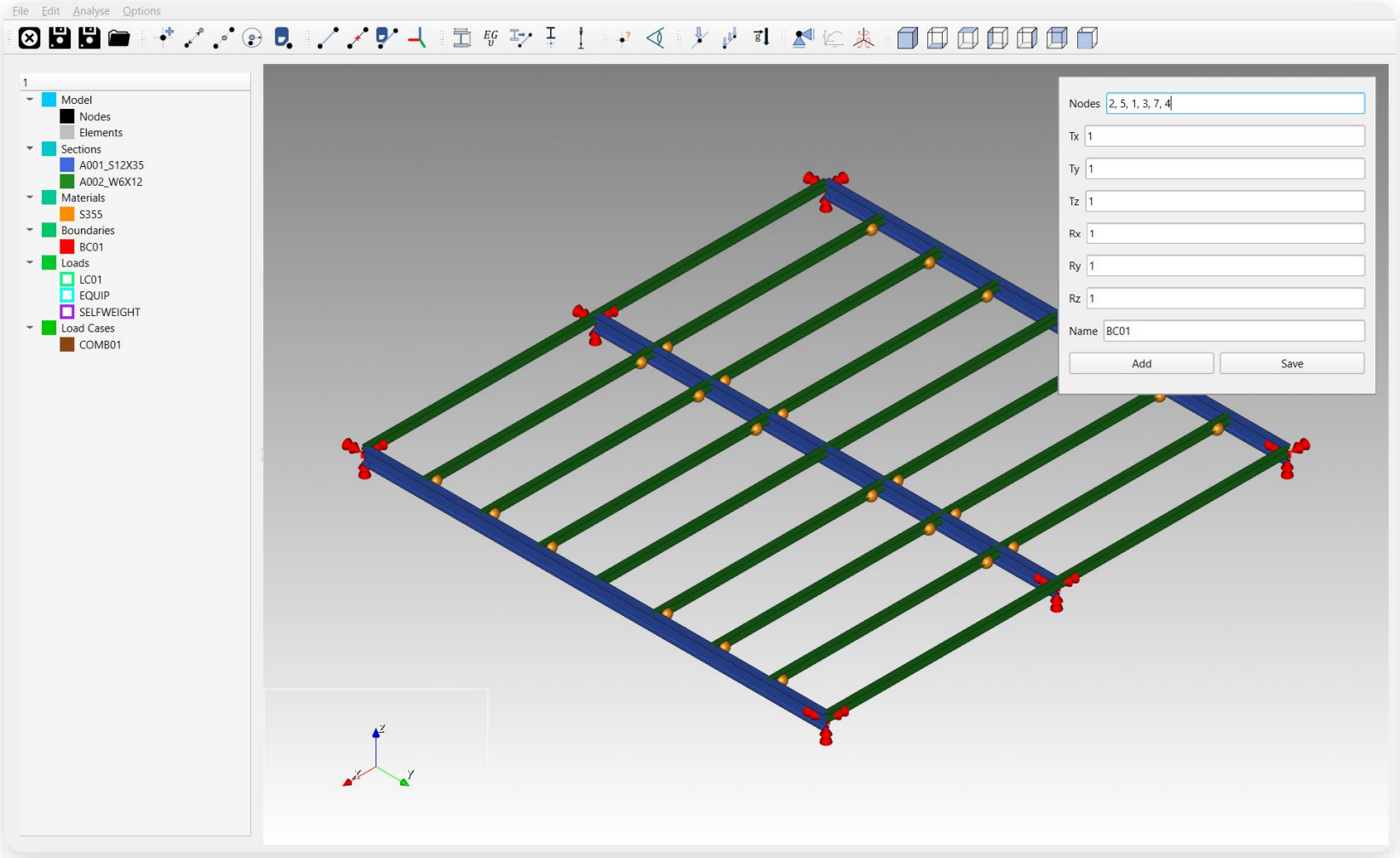


BC01: nodes 1, 2, 3, 4, 5, 7 fully fixed

KUSOR-3D
MODELING & SIMULATION By ENERGAS

# Step 16 · Elastic supports

- **Elastic support (springs):** pick nodes; KX, KY, KZ in N/m and KRX, KRY, KRZ in N·m/rad, global axes; 0 = no spring on that direction.
- **Active in every load case:** several sets on one node add up; a spring on a rigidly fixed direction is inert.
- A model supported by springs alone can be solved.
- **3D view:** the support symbols in their own colour.

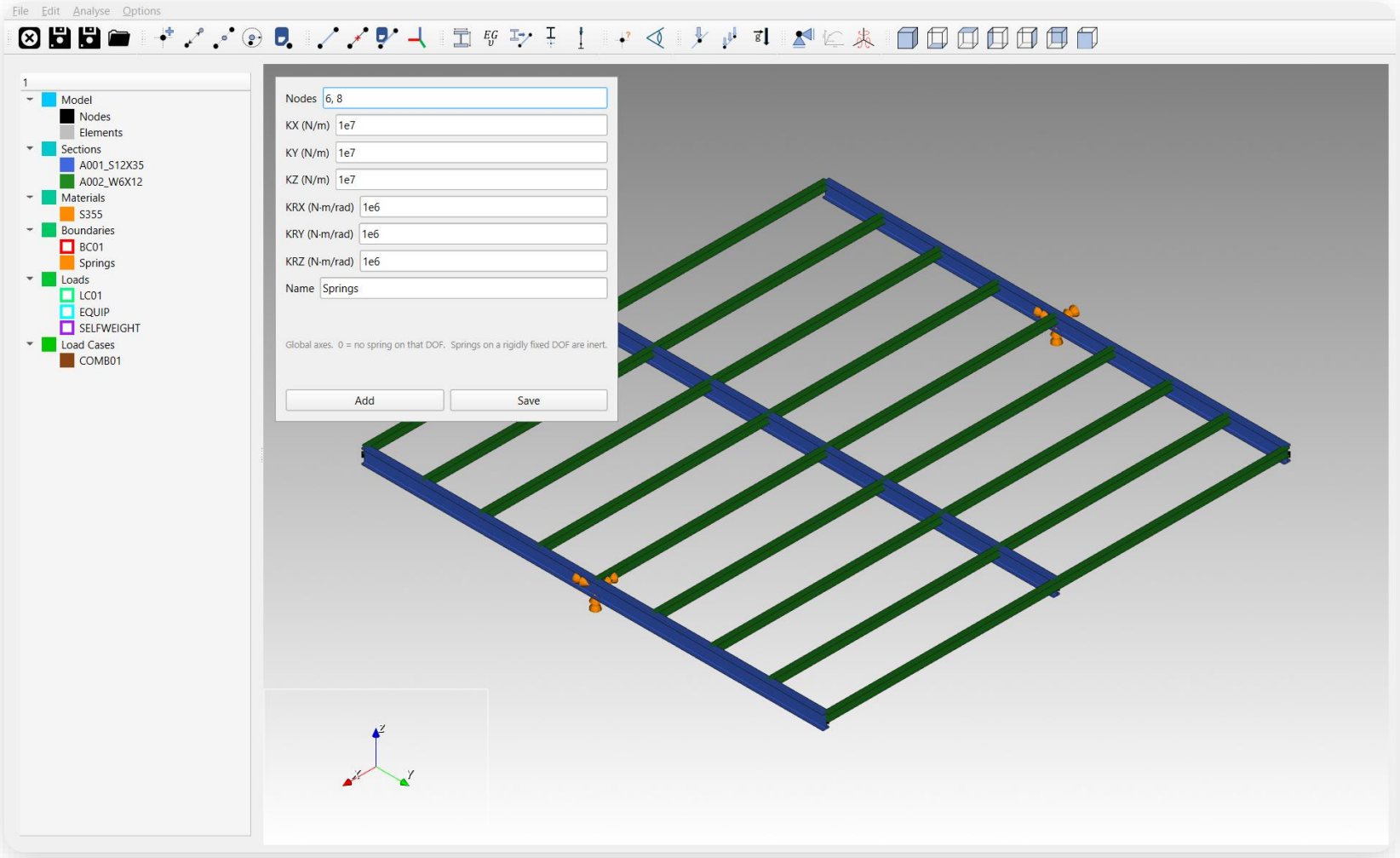


Nodes 6 and 8 on springs: KX = KY = KZ = $10^7$ N/m, KRX = KRY = KRZ = $10^6$ N·m/rad

06

# SACS import

- Import a SACS deck
- Sections and member data
- Loads and supports



KUSOR-3D
MODELING & SIMULATION By ENERGAS

# Importing a SACS model

- **File › Import › SACS model:** a SACS input deck (*.inp, *.txt, *.sacinp, *.dat) becomes a model that solves, renders and code-checks at once.
- **Sections:** TUB → CHS, WF/PLG → I sections with properties computed by the section engine; library shapes from the AISC / EN database; CON sections as tapers.
- **Also translated:** materials, local axes with the MEMBER roll, supports and ELASTI springs, joint and member loads, combinations.
- **Import report:** counts up front; everything not fully translated listed in the details.

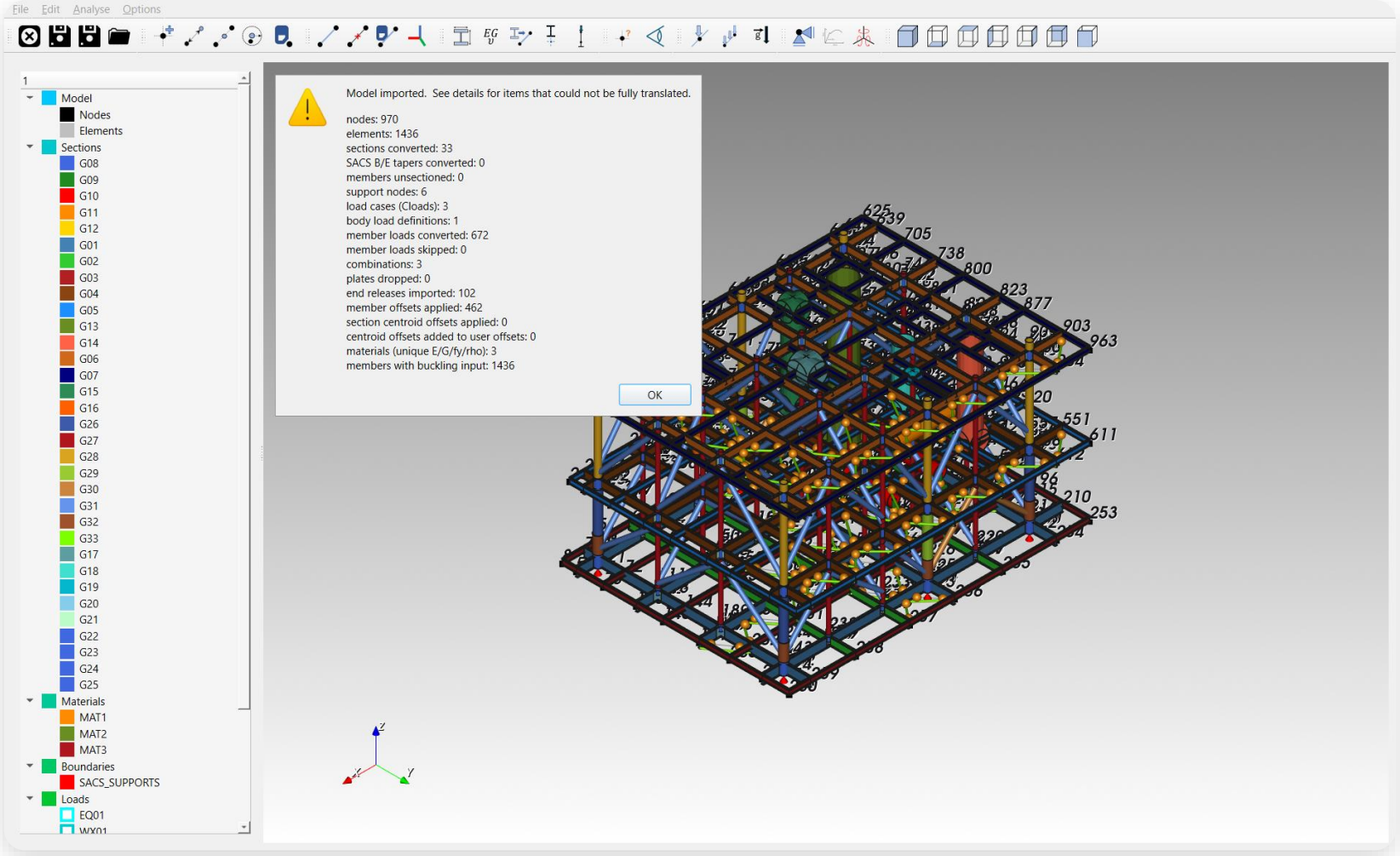


An offshore module: 970 joints, 1 436 members, 33 sections, 3 combinations — imported in a few seconds

KUSOR-3D
MODELING & SIMULATION By ENERGAS

# Imported member data

## Member end releases

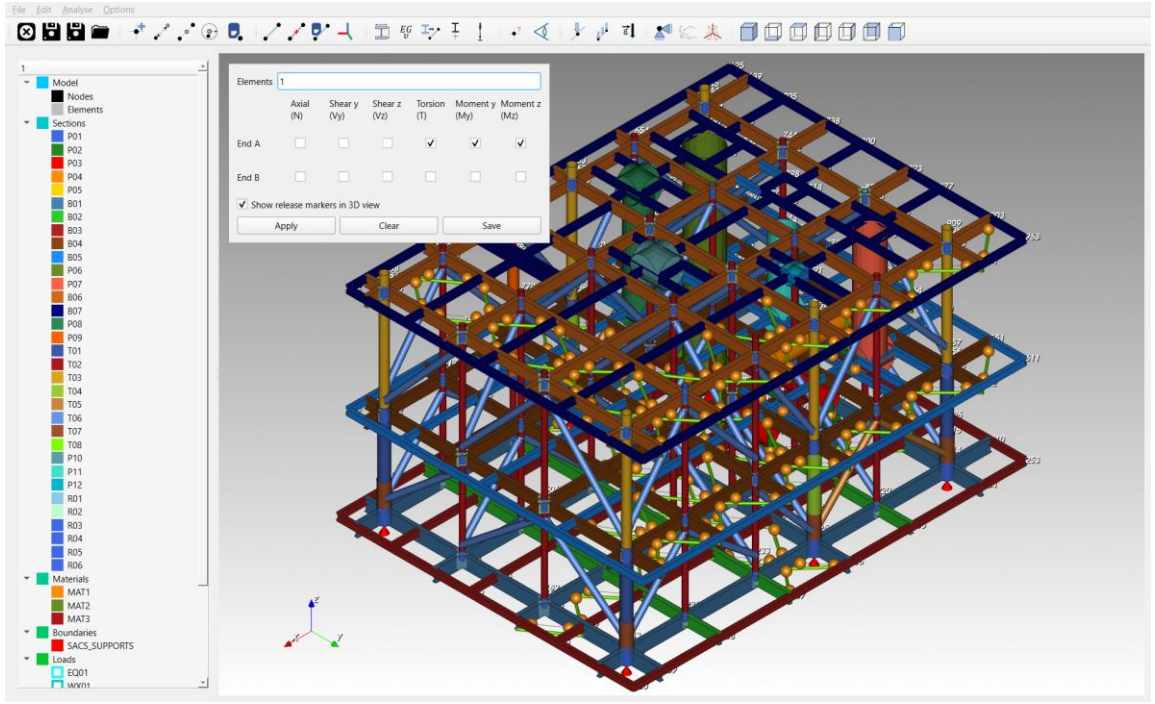


Member 1: T, My, Mz released at end A

## Buckling lengths

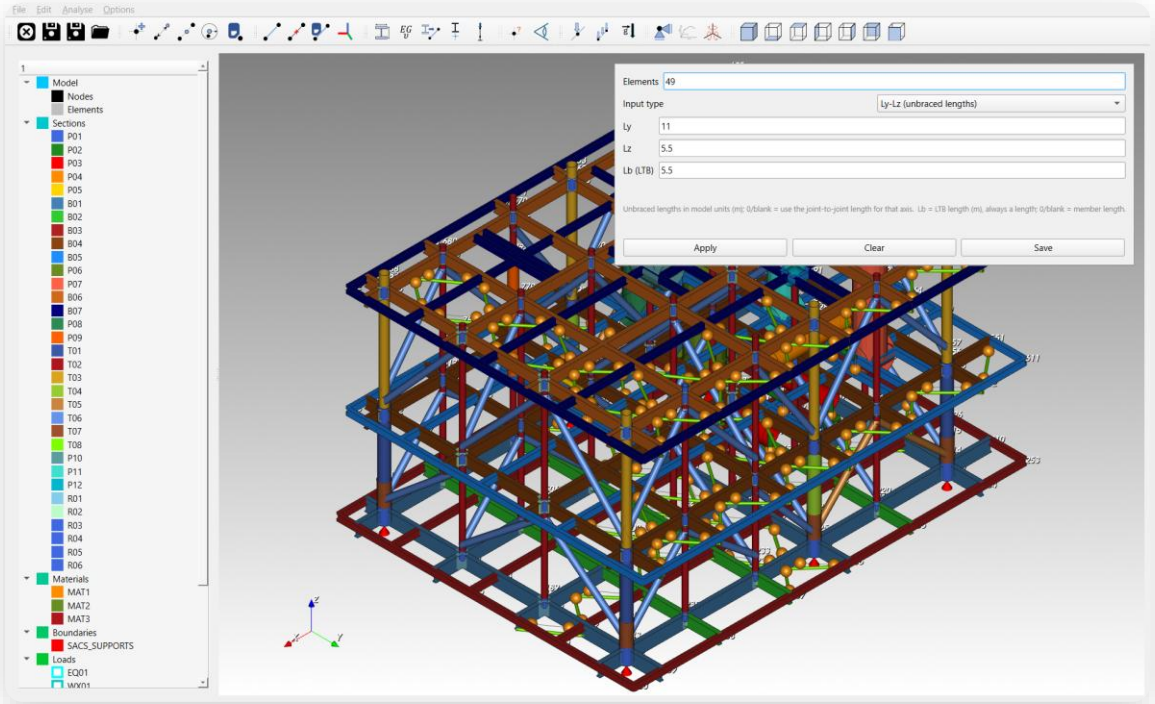


Member 49: Ly = 11.0 m, Lz = 5.5 m, Lb = 5.5 m

- **Releases: 102 member end releases, in the member local axes (with the MEMBER roll).**
- **Buckling lengths: read for all 1 436 members from the GRUP and MEMBER cards.**
- **Sections: 33 SACS groups converted, none left without a section.**

KUSOR-3D
MODELING & SIMULATION By ENERGAS

# Imported loads and supports

## Member loads

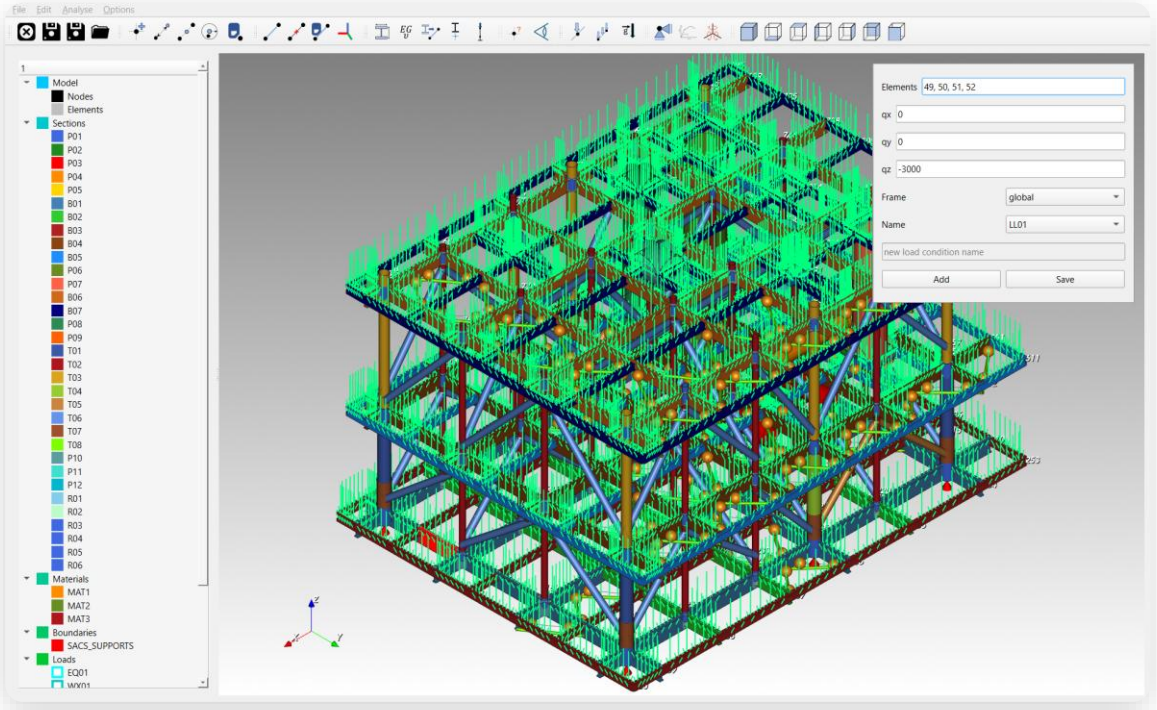


LL01 (Deck live load): 672 members

- **Joint loads and uniform member loads:** load conditions, as if typed in the dialogs.
- **Self-weight: the DEAD card becomes a body-load definition (DL01), generated at analysis time.**

## Supports

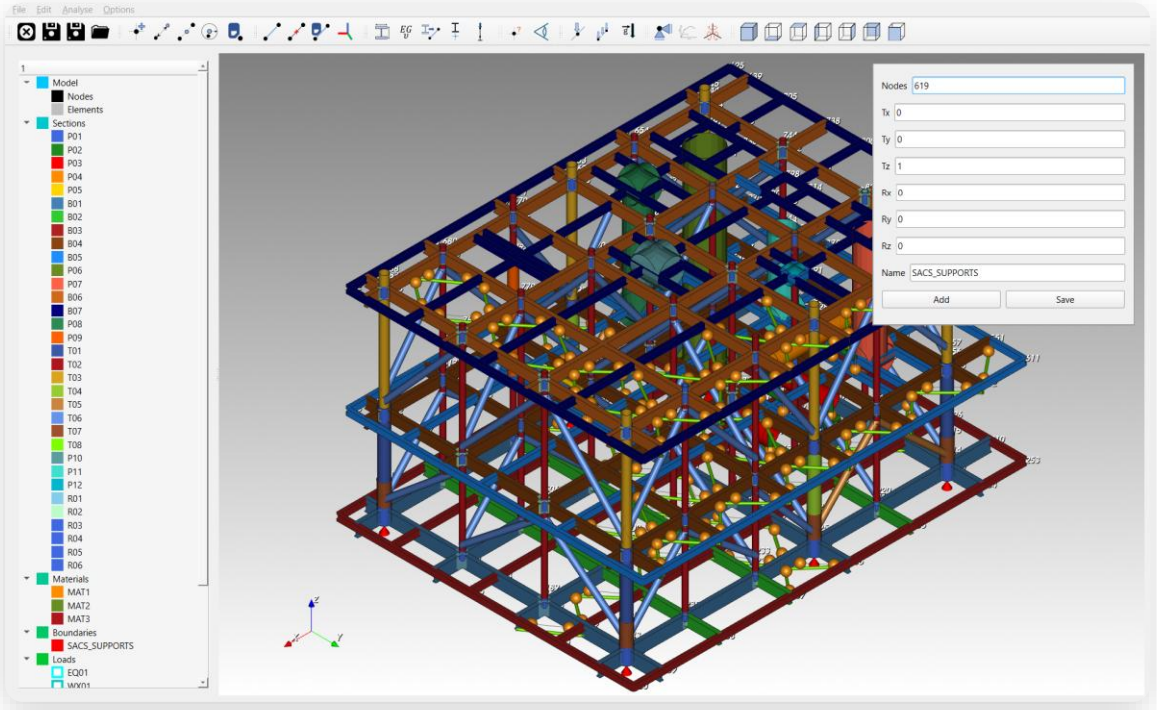


SACS_SUPPORTS: node 620 Tx Ty Tz; node 621 Ty Tz; nodes 619, 622, 623, 624 Tz

- **Supports: 6 support nodes with their restraints; 3 combinations C001 to C003.**

07

# Post-processing

- Utilisation (UC)
- Internal forces, stresses
- Displacements, deformed shape
- Support reactions
- Member review
- Calculation report



KUSOR-3D
MODELING & SIMULATION By ENERGAS

KUSOR-3D
MODELING & SIMULATION By ENERGAS

# The post-processing window

- **Scope, category, quantity, combination:** elements (internal forces, UC, stresses) or nodes (displacements, reactions), for any solved combination.
- **Apply / Clear:** Apply paints the field on the model; Clear removes it and returns to the undeformed shape.
- **Legend:** discrete colour bands, 2 to 32 subdivisions (Options); min and max are printed in the status line.
- **Unverified members** are drawn in grey, outside the colour range, never hidden.
- **Shape:** undeformed or deformed, with its magnitude, for any field.
- **Member Review and Report…** open from the same window.

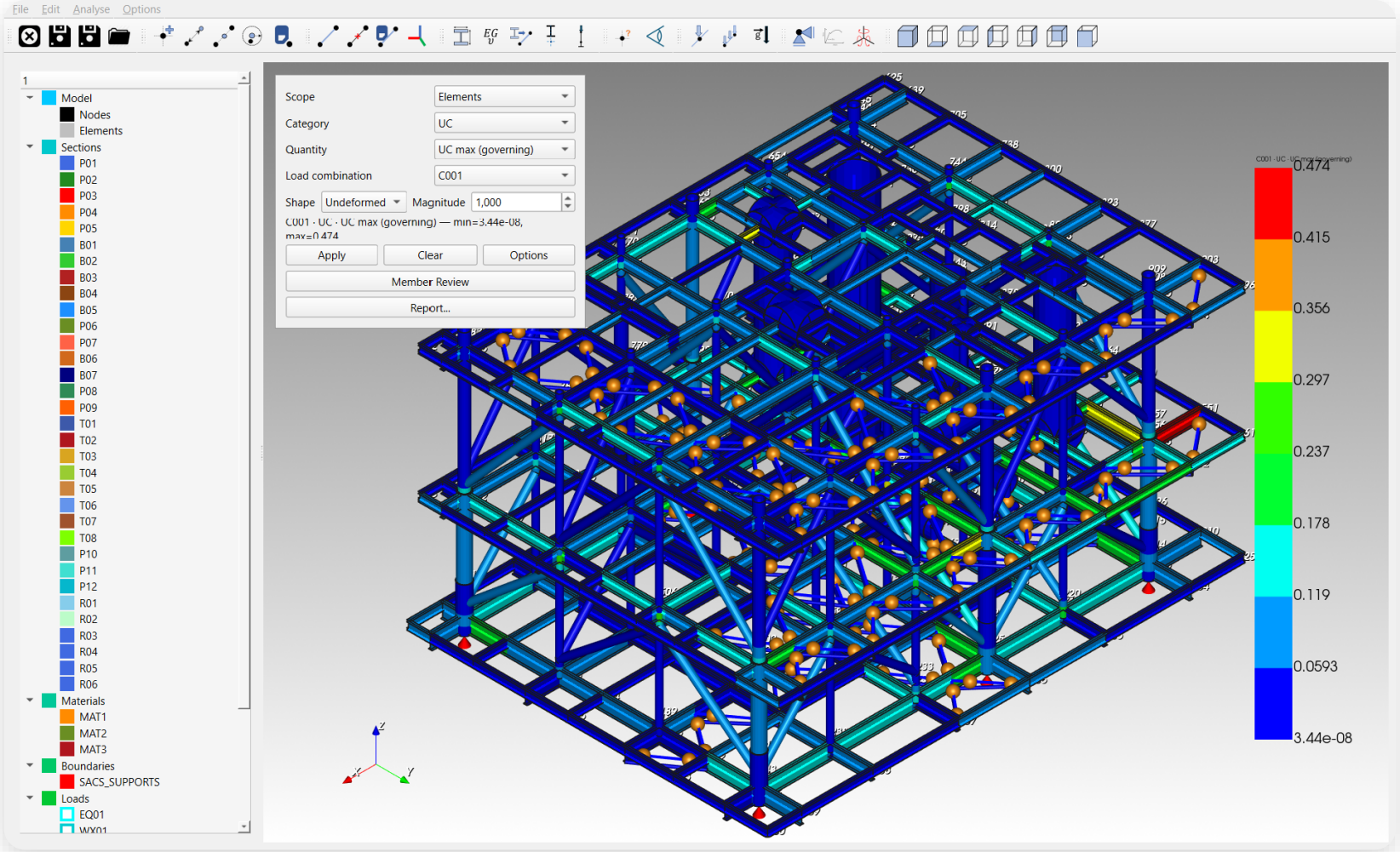


Module, combination C001: UC max (governing), 0 to 0.474

KUSOR-3D
MODELING & SIMULATION By ENERGAS

# Utilisation maps (UC)

## UC max (governing)

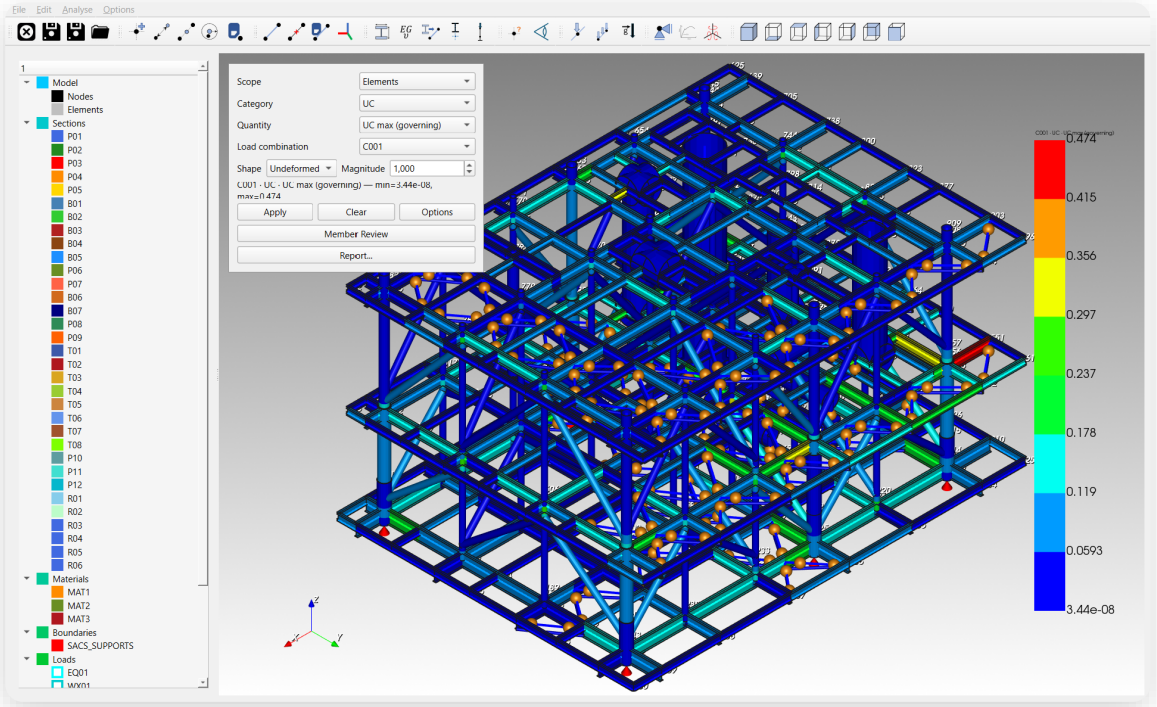


C001: 0 to 0.474

- **Nine UC quantities:** governing max, tension, axial, bending y, bending z, shear y, shear z, LTB, combined.
- **From the stored EC3 check** of each combination, heat-mapped on the extruded sections.

## UC LTB

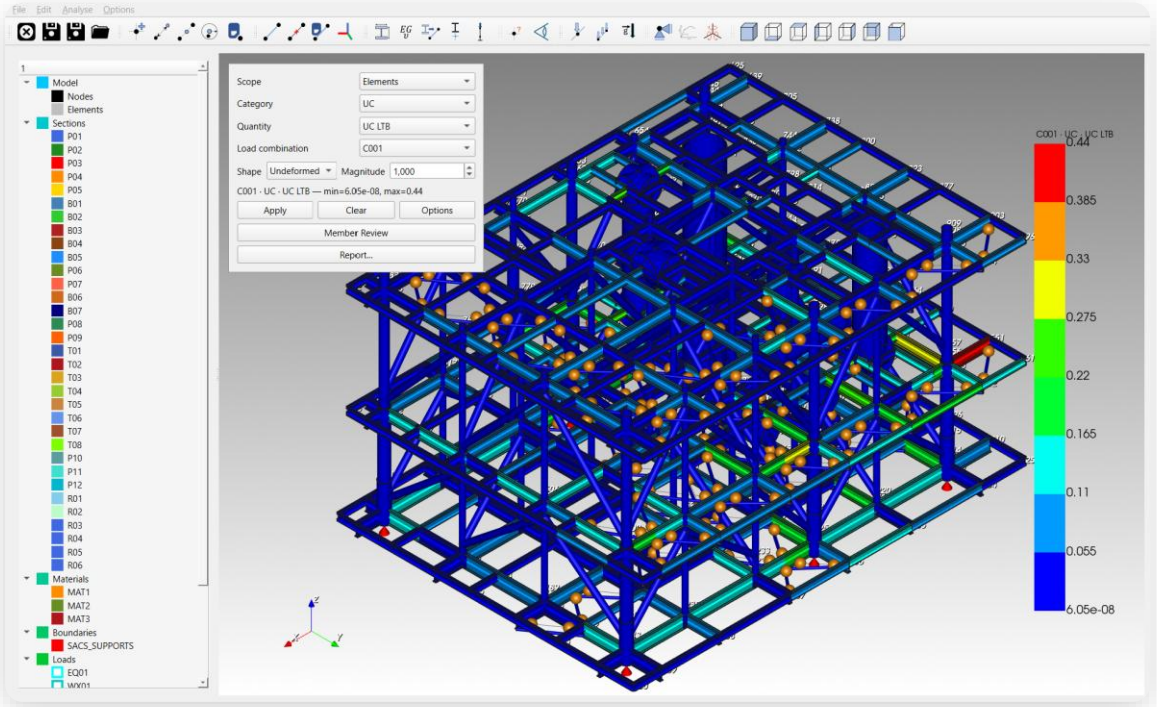


C001: UC LTB alone reaches 0.44 on the most loaded deck beams

- **Module : max UC 0.474 on member 312 (group B04), governed by the §6.3.3 interaction; LTB alone reaches 0.440.**
- **Colour scale: scaled to the result range of the selected field and combination. Here the top colour corresponds to UC = 0.474; red is not a failure indication.**

KUSOR-3D
MODELING & SIMULATION By ENERGAS

# Internal forces and stresses

## Bending moment My

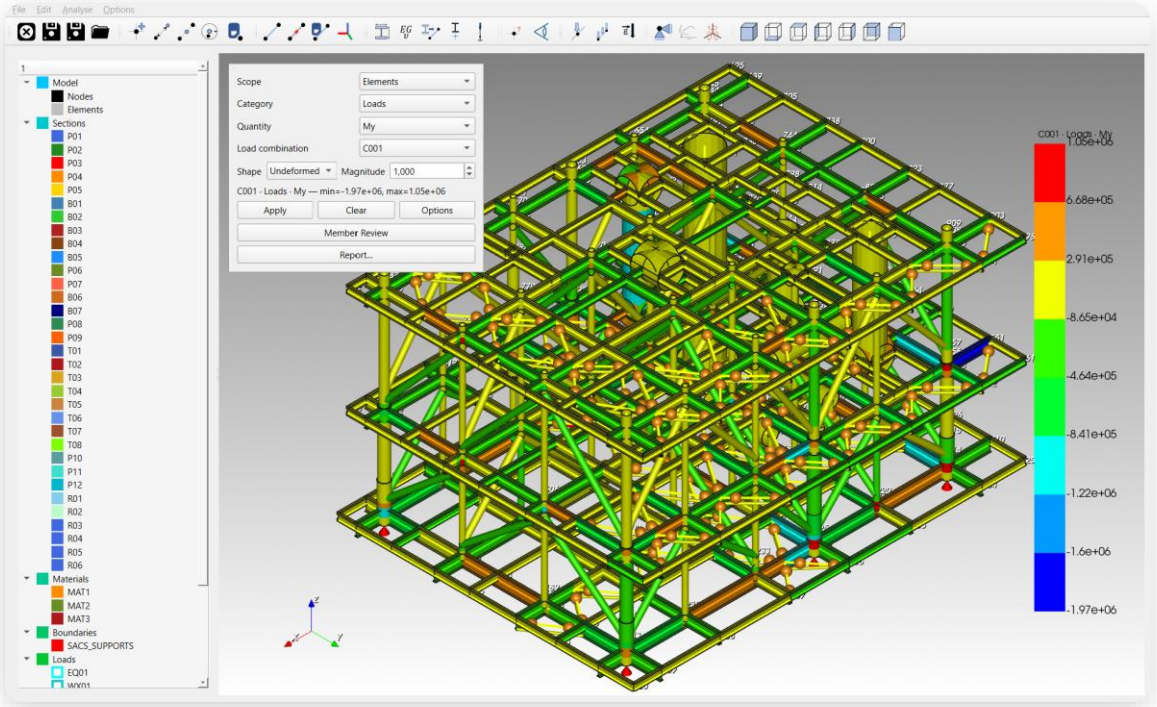


C001: My from −1 970 to 1 050 kN·m

- **Internal forces:** Fx (axial), Fy, Fz (shears), Mx (torsion), My, Mz — the signed value whose magnitude governs each member, ends and stations.

## σ normal

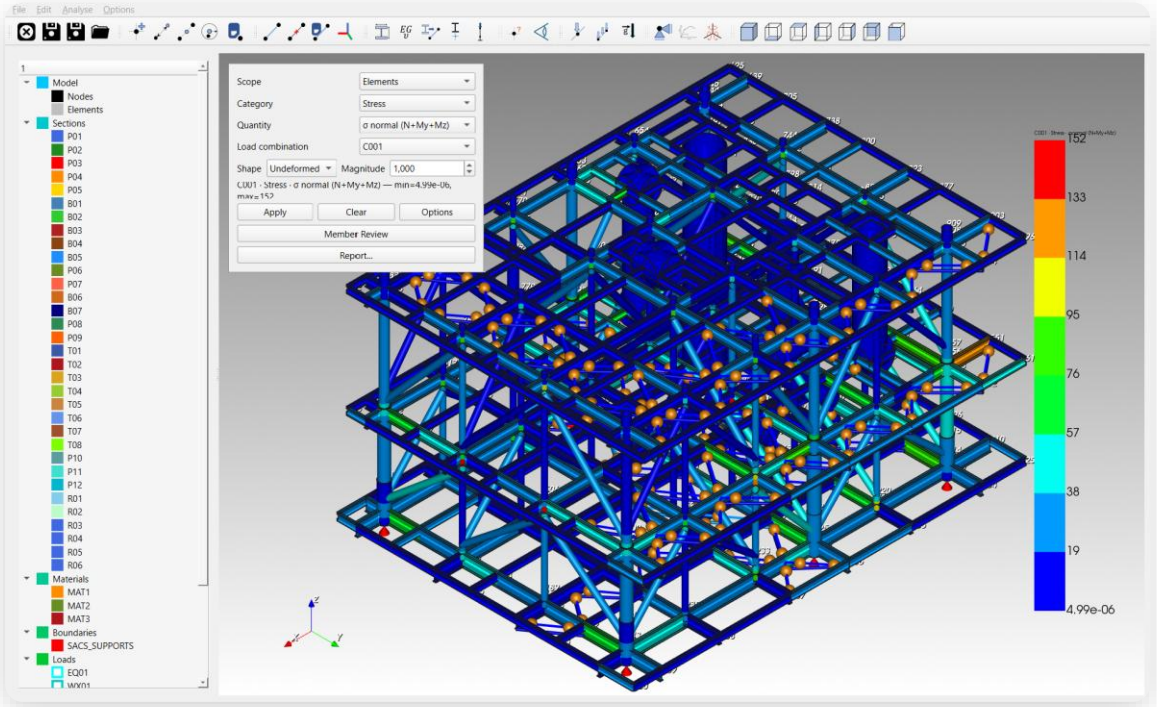


C001: 0 to 152 MPa

- **Stresses (MPa):** σ from N, from My, from Mz

KUSOR-3D
MODELING & SIMULATION By ENERGAS

# Displacements and deformed shape

## Displacements at nodes, deformed

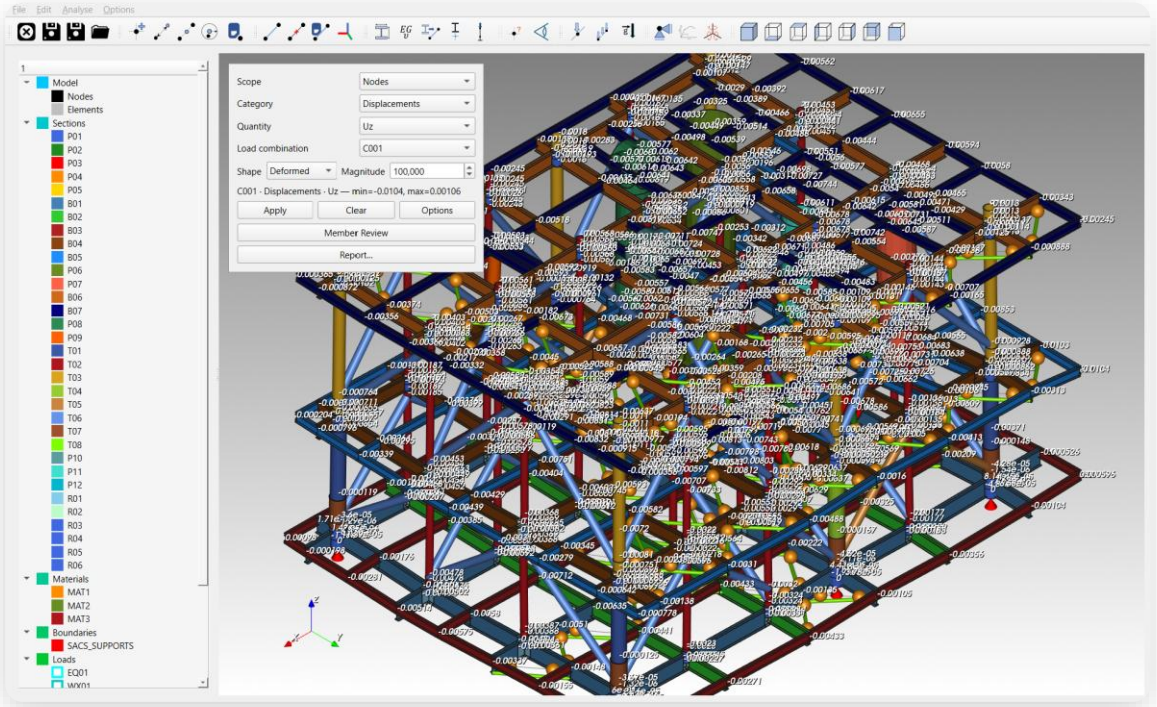


Upper deck z = 25.6 m, C001: Uz down to −10.4 mm (magnitude 100)

## Deformed shape coloured by UC

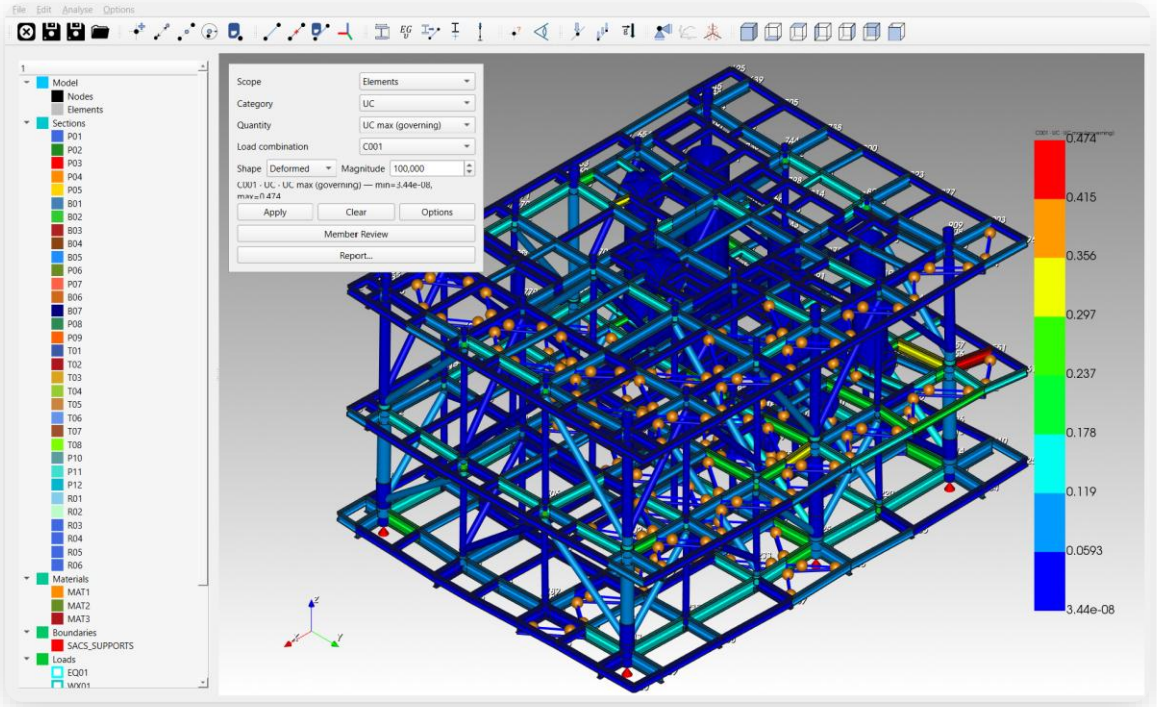


C001: whole module, deformed ×100, UC max

- **Nodal results:** Ux, Uy, Uz, |U| and the rotations Rx, Ry, Rz, written at the nodes.
- **Deformed shape (display only):** magnitude proposed so that the largest displacement draws at 5 % of the model size; editable.

- **Any field on the deformed shape: e.g. the UC map drawn on the deformed structure (magnitude 100 here; the automatic proposal is 159).**

# Support reactions

- **Global axes:** Fx, Fy, Fz, |F| and Mx, My, Mz, |M|, at the supported nodes only.
- **3D view:** force arrows and moment rings at each support, with the value as a label.
- **Resultants by load case and combination** are listed in the calculation report.

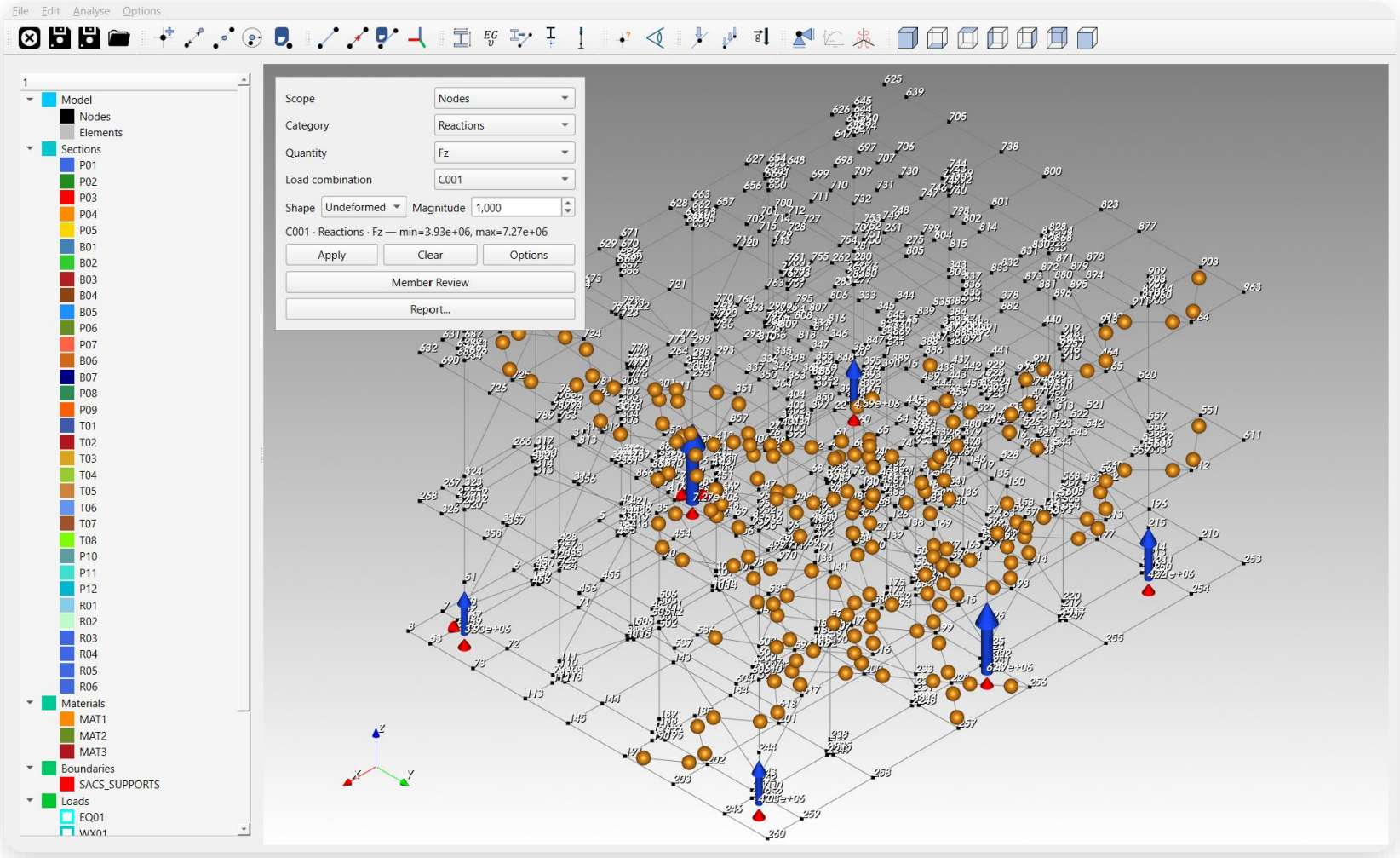


C001: vertical reactions Fz at the six support nodes

# Member review

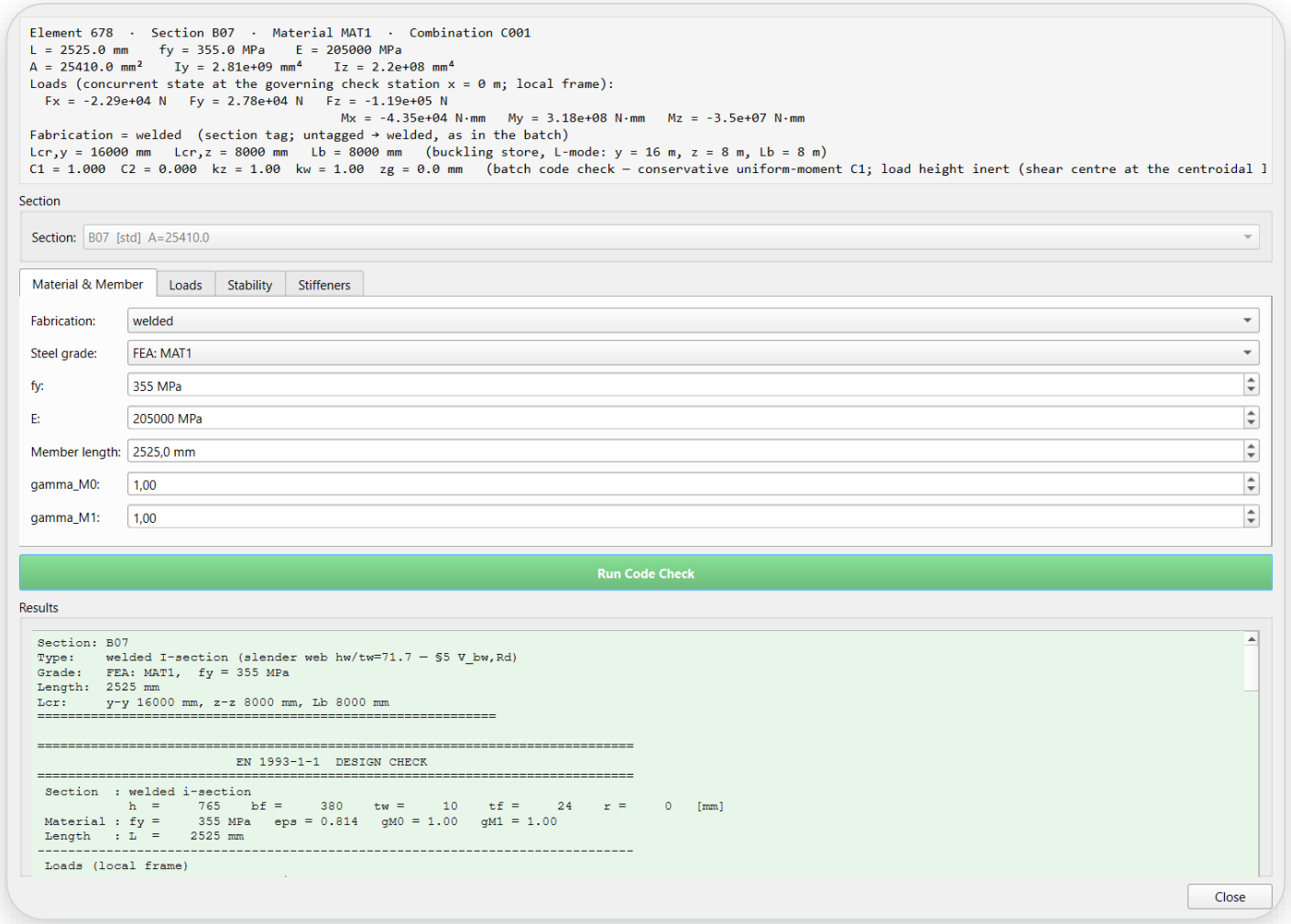


Member 678 (B07), combination C001: the EC3 form pre-filled from the model

- **Pick a member:** the full EC3 dialog opens pre-filled — section, material, length, effective lengths, C1/C2, forces at the governing station.
- **Same inputs as the batch check;** every source printed, every field editable.

| Clause | Check | Util | Verdict |
|---|---|---|---|
| §6.3.1 | Axial buckling | 0.005 | OK |
| §6.2.5 | Bending y | 0.122 | OK |
| §6.2.5 | Bending z | 0.085 | OK |
| §6.3.2 | LTB | 0.246 | OK |
| §6.2.6 | Shear y (flange) | 0.007 | OK |
| §EN1993-1-5 §5 | Shear z (web, V_bw,Rd) | 0.099 | OK |
| §6.2.7 | Torsion (St. Venant) | 0.001 | OK |
| §6.2.7(9) | V_z + T (web) | 0.099 | OK |
| §6.2.7(9) | V_y + T (flange) | 0.007 | OK |
| §6.2.9 / 6.2.10 | CS linear | 0.210 | OK |
| §6.3.3 | Eq 6.61 | 0.335 | OK |
| §6.3.3 | Eq 6.62 | 0.337 | OK <- governs |

ALL CHECKS PASS Max utilization = 0.337 (governed by §6.3.3 Eq 6.62)

# Calculation report

- **One fixed-width text file,** six blocks ticked in the dialog: section properties, load cases and combinations (resultants and COG of loads), member end loads, group UC and member UC for every check.
- **Header:** model size, units, torsion policy (St Venant only; warping torsion is not considered).
- **Module: 13 232 lines for 1 436 members × 3 combinations.**

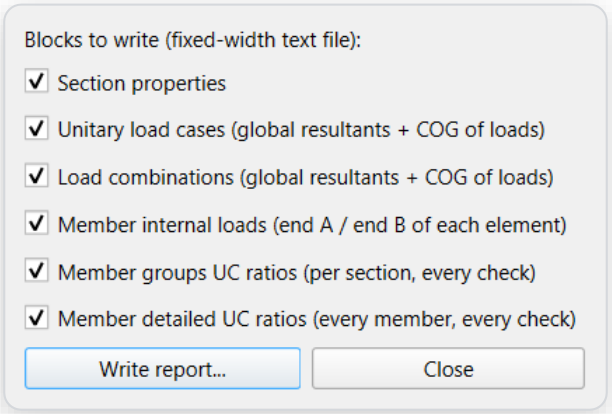


Calculation report dialog

```
KUSOR-3D CALCULATION REPORT
========================
Model      : demo_module.pkl
Date       : 2026-10-12 15:27
Model size : 970 nodes, 1436 elements, 33 section groups, 5 load cases,
             3 combinations, 3 solved, 3 code-checked
Units      : kN, kN.m, m; section properties in mm
Torsion    : St Venant only; warping torsion is not considered


1. SECTION PROPERTIES
=====================
Group           Section         Type              Fabric.       A mm2     Iy mm4     Iz mm4      J mm4
--------------- --------------- ----------------- ---------- -------- ---------- ---------- ----------
P01             P01             CircularHollow                 9060 4.8266e+07 4.8266e+07 9.6518e+07
P02             P02             CircularHollow                35230 1.2575e+09 1.2575e+09 2.5150e+09
P03             P03             CircularHollow               325284 1.9742e+11 1.9742e+11 3.9483e+11
P04             P04             CircularHollow               279228 1.4918e+11 1.4918e+11 2.9836e+11
P05             P05             CircularHollow                70579 2.0338e+09 2.0338e+09 4.0663e+09
B01             B01             ISection                      45708 1.7269e+10 3.1023e+08 6.5579e+06
B02             B02             ISection                      37544 1.0225e+10 3.2127e+08 5.5238e+06
B03             B03             ISection                      25410 2.8119e+09 2.1955e+08 3.5688e+06
B04             B04             ISection                      37544 1.0225e+10 3.2127e+08 5.5238e+06
B05             B05             ISection                      25410 2.8119e+09 2.1955e+08 3.5688e+06
P06             P06             CircularHollow               356433 7.3155e+11 7.3155e+11 1.4631e+12
P07             P07             CircularHollow               334033 4.3350e+11 4.3350e+11 8.6700e+11
B06             B06             ISection                      37544 1.0225e+10 3.2127e+08 5.5238e+06
B07             B07             ISection                      25410 2.8119e+09 2.1955e+08 3.5688e+06
P08             P08             CircularHollow               278502 3.0402e+11 3.0402e+11 6.0803e+11
P09             P09             CircularHollow               111137 1.5979e+10 1.5979e+10 3.1956e+10
T01             T01             CircularHollow               122126 2.4019e+10 2.4019e+10 4.8038e+10
T02             T02             CircularHollow                54714 2.6510e+09 2.6510e+09 5.3015e+09
T03             T03             CircularHollow                66237 8.3494e+09 8.3494e+09 1.6699e+10
T04             T04             CircularHollow               211271 4.7835e+10 4.7835e+10 9.5666e+10
T05             T05             CircularHollow                73187 4.8571e+09 4.8571e+09 9.7136e+09
```

Report of the module — header and start of block 1 (section properties)

THANK YOU

# KUSOR-3D

Modeling & Simulation by ENERGAS

**Rami Gasmi**
rgasmi@energas-consult.com
+33 6 24 59 34 79



KUSOR-3D
MODELING & SIMULATION By ENERGAS